www.oyostepper.com

H1 Series Inverter User Manual

www.oyostepper.com

H1 Series Inverter
User Manual

www.oyostepper.com

www.oyostepper.com

Preface

Thanks for using the H1 series compact vector inverter produced

H1 series inverter is a new generation of adaptive vector inverter independently developed by our company based on the industry application requirements of high stability, small size and easy debugging. This product has V/F control, speed sensorless vector control, etc., suitable for asynchronous motors, permanent magnet synchronous motors, single-phase motors.

H1 series inverter have compact structure, convenient and flexible installation, reasonable heat dissipation design to ensure product reliability, rich keyboards and multi-function cards to choose, flexible functions, free programming, and can meet the needs of different industries.

The manual provides users with relevant precautions and guidance for the selection, installation, parameter setting, on-site debugging, fault diagnosis and daily maintenance. In order to ensure that the inverter can be used correctly, please read this manual carefully before installing it and keep it in a safe place for later use.

First time to use:

For the first time to use, please read this manual carefully. If you have any doubts about some functions and performance, please contact our technical staff for help.

The scope of application of this manual:

This manual applies to the H1 series of products produced by our company

Version No.: 2021.V1.0

Attentions:

- Please power off when wiring.
- Electronic components inside AC drive are especially sensitive to static electricity, do not put anything into internal of AC drive. And do not touch main circuit board.
- After power cut, if indicator is still lamp, it still have high voltage in AC drive. It is very dangerous, please do not touch internal circuit and components
- Please ensure the grounding terminals of AC drive ⏚ is grounded correctly.
- Never connect input power supply with output terminal U, V, W of AC drive.

Contents

Contents 1
Safety Precautions 4
Warning 4
Notes 4
Operation precautions 5
H1 series nameplate 7
H1 series specification 7
CHAPTER 1 - Installation 8
1.1 Installation prevention 8
CHAPTER 2 - Basic configuration 9
2.1 Peripheral device connection 9
2.2 List of main circuit applicable devices and their electrical specifications 9
CHAPTER 3 - Wiring 10
3.1 Main circuit and function card 10
3.2 Power terminal wiring instructions 10
3.3 Main circuit terminal description 11
3.4 Function card configuration table 11
CHAPTER 4 - Keyboard 12
4.1 Keyboard features 12
4.2 Keyboard operation 13
4.3 Character display 13
CHAPTER 5 - Quick get start 14
CHAPTER 6 - Function parameter list 18
6.1 Group 01 parameters: System parameters 38
6.2 Group 02 parameters: Set channel 42
6.3 Group 03 parameters: Input and output 49
6.4 Group 04 parameters: PID control 56
6.5 Group 05 parameters: System control 59
6.6 Group 06 parameters: Motor model 64
6.7 Group 07 parameters: Control algorithm 65
6.8 Group 09 parameters: System protect 67
6.9 Group 10 parameters: System status 67
6.10 Group 11 parameters: Fault record 71
6.11 Group 12 parameters: Free parameter 72
6.12 Group 13 parameters: Function output 72
6.13 Group 14 parameters: Encoder 74
6.14 Group 16 parameters: Logic unit 74
6.15 Group 17 parameters: Mathematical operations 79
6.16 Group 18 parameters: Timing control 84

CHAPTER 7 - Macro-program examples 87
7.1 Multi-speed control operation 87
7.2 The internal control with eight periods of speed 87
7.3 PID control operation 87
CHAPTER 8 - Application macro 88
8.1 Comprehensive macro 1 89
8.2 Comprehensive macro 2 91
8.3 Comprehensive macro 3 93
8.4 Comprehensive macro 4 95
8.5 1-Line command macro 97
8.6 2-Line command macro 1 97
8.7 2-Line command macro 2 98
8.8 3-Line command macro 1 98
8.9 3-Line command macro 2 99
8.10 Main and auxiliary settings 100
8.11 Multi-stage speed macro 101
8.12 PID macro 1 102
8.13 PID macro 2 103
8.14 Speed start macro 104
8.15 DC injection macro 104
8.16 Free parking macro 104
8.17 DC brake macro 104
8.18 Emergency acceleration macro 105
8.19 Emergency deceleration macro 105
8.20 Console switch macro 106
8.21 Frequency reach macro 107
8.22 FDT macro 108
8.23 Acceleration and deceleration switching macro 109
8.24 Brake signal macro 111
8.25 Release signal macro 112
8.26 Break detection macro 113
8.27 Signal loss macro 114
8.28 Internal control eight-stage speed macro 115
CHAPTER 9 - RS485 communication 117
9.1 Introduction 117
9.2 Specifications 117
9.3 Communication protocol 117
9.3.1 Format description 117
9.3.2 Address coding 117
9.3.3 Read holding register 119
9.3.4 Preset a single register 120
9.3.5 Preset multiple registers 120
9.3.6 Communication error codes 121
CHAPTER 10 - Fault exclusion and repair 122
10.1 Protection function 122

10.2 Fault code table 122
10.3 Maintenance and inspection prevention 122
10.4 Checkpoint 123
10.5 Parts replacement 123
CHAPTER 11 - Technical Notes 123
CHAPTER 12 - Selection of braking resistor 124
12.1 Brake resistor configuration table 124
12.2 Installation dimension drawing of braking resistor 125
CHAPTER 13 - Dimensions 126
CHAPTER 14 - Quick parameter configuration table 127
CHAPTER 15 - Standard card (H0101) instructions for use 129
15.1 Overview 129
15.2 Mechanical installation 129
15.3 Wiring diagram 130
15.4 Control terminal 130
CHAPTER 16 - H0110 card instructions for use 132
16.1 Overview 132
16.2 Mechanical installation 132
16.3 Wiring diagram 133
16.4 Control terminal 133
16.5 H0110 card application engraving machine instructions 135
16.6 H0110 card application constant pressure water supply instructions 137
CHAPTER 17 - Standard card (H0100) instructions 139
17.1 Overview 139
17.2 Mechanical installation 140
17.3 Wiring diagram 140
17.4 Control terminal 140
CHAPTER 18 - H0200 card instructions for use 142
18.1 Overview 142
18.2 Mechanical installation 142
18.3 Wiring diagram 143
18.4 Control terminal 144
18.5 Operator description 145
18.6 Inverter safety switch STO function 146
CHAPTER 19 - H0201 card instructions for use 147
19.1 Overview 147
19.2 Mechanical installation 147
19.3 Wiring diagram 148
19.4 Control terminal 149
19.5 Operator description 149
CHAPTER 20 - OP-H101 external keyboard simple instructions 151
CHAPTER 21 - OP-H102 external keyboard simple instructions 152

SAFETY PRECAUTIONS

- Always observe safety precautions to prevent accidents and potential hazards.
- In this manual, the safety information is classified as below:

⚠ WARNING Fault operation may result in serious personal injury or death.

⚠ CAUTION Fault operation may result personal injury or property damage from minor to moderate class.

- In this manual, the following two signs are used as safety precautions:

⚠ 1) Under certain conditions, identify dangers that cause personal injury.Since dangerous voltages may exist, special attention should be paid.

⚠ 2) Under certain conditions, identify potential hazards. Read the information carefully and follow the instructions.

- For convenience, please save it nearby.
- Read this manual carefully to optimize the performance of H1 series inverter and ensure safe use.

⚠ WARNING

- Do not open the casing in case of electric shock when the power supply has been supplied or the inverter is in the running state.
- Do not operate the inverter when the front-cover of the inverter is opening. In case of shocked by high voltage or exposed charging capacitors.
- Do not open the inverter's casing except for periodic inspection or wiring, even if the inverter is not connected to input voltage.In case of get an electric shock from the charging circuit.
- Wiring and periodic maintain should be performed after removing the input power and using the instrument to discharge the DC voltage (below DC 30V) for at least 10 minutes.In case of electric shock.
- Start the switch with dry hands in case of get an electric shock.
- Do not use cables with damaged insulation in case of an electric shock.
- Do not make the cable to scratches, pinch, overvoltage or overload in case of an electric shock.

⚠ NOTES

- The inverter should be installed on a non-flammable surface, and do not place flammable materials nearby. Otherwise, a fire may occur.
- If the inverter is damaged, immediately disconnect the input power in case of causing secondary damage to the equipment or fire.
- After the input power is disconnected, the residual heat of the inverter will remain for several minutes. Do not touch it.Otherwise, you may be physically injured (for example: skin burns or injuries).
- Do not power on the inverter that is damaged or missing parts, even if the installation has been completed.Otherwise, electric shock may occur.
- Burlap, paper dust, wood dust, dust, metal fragments or other miscellaneous objects are not allowed to enter the inverter.Otherwise, fire or accident may occur.

OPERATIONAL PRECAUTIONS

(1) Maintenance and installation

- Handle according to the weight of the product.
- The number of stacked inverter packaging boxes should not exceed the specified number.
- Installation according to the instructions in this manual.
- Do not open the casing during delivery.
- Do not place heavy objects on the inverter.
- Check if the inverter's packing direction is correct.
- Do not drop or squeeze the inverter.
- For 200V inverters, use category 3 grounding method (grounding resistance <100Ω), For 400V inverters (grounding resistance <10Ω)
- H1 series contains ESD (electrostatic discharge) sensitive parts. When inspecting or installing, be careful to take protective measures (electrostatic discharge) before touching the printed circuit board.
- Use the inverter under the following environmental conditions.

Table 0-1: Environmental conditions

Environment	Environment Temperature	-10°C~+40°C(Ambient temperature is 40°C~50°C, please derating use;Downshift usage if the temperature is below -10°C)
	Humidity	5%~95%RH, No condensation
	Storage temperature	-40°C~+70°C
	Installation site	Indoor, no direct sunlight, no dust, corrosive gas, flammable gas, oil mist, water vapor, dripping water or salt etc.
	Vibration	For derating above 1000 meters, derate 10% for every 1000 meters
	Altitude	Less than 5.9 m / s^2 (0.6g)

(2) Wiring

- Do not install power capacitors, surge suppressors, or RFI filters on the output side of the inverter.
- The connection method of the output cables (U, V, W) connected to the motor will affect the rotation direction of the motor.
- Incorrect terminal wiring may cause damage to the device.
- If the positive and negative poles of the terminals are reversed, the inverter may be damaged.
- Only personnel who are familiar with the H1 inverter can wire and inspect the inverter.
- Install the inverter before wiring, otherwise, you may get an electric shock or personal injury.

(3) Trial operation

- Check all parameters before operation and modify the parameter values according to the load type.
- Always use within the voltage range in this manual, otherwise the inverter may be damaged.

(4) Operation prevention

- When the automatic restart function is selected, since the motor will restart suddenly after the fault stops, it should be away from the device.
- The "STOP" key on the operation keyboard is only effective when the corresponding function settings have been set, and special circumstances should be prepared for emergency stop switch.

- If the fault reset is set using external terminals, a sudden start will occur. Please check in advance whether the external terminal signal is in the off position, in case of an accident may occur.
- Do not modify or change anything inside the inverter.
- The electronic thermal protection function of the inverter may not protect the motor.
- Do not use electromagnetic AC contactor as the switch for frequent start and stop of the inverter on the input side of the inverter.
- Use a noise filter to reduce the influence of electromagnetic interference generated by the inverter, in case of nearby electronic equipment may be interfered.
- If the input voltage is unbalanced, an AC reactor needs to be installed. The potential higher harmonics from the inverter may cause the power capacitor and generator to become hot or damaged.
- After the parameters are initialized, the parameter values are restored to the factory settings, and the parameters need to be set again before running.
- The inverter can be easily set to high-speed operation. Check the capacity of the motor or mechanical equipment before operation.
- When the DC braking function is used, there will be no stopping torque. When it is necessary to stop the torque, install a separate device.
- When driving 380V inverters and motors, use insulated rectifiers and take measures to suppress surge voltage. The surge voltage caused by the wiring constant problem at the motor terminals may damage the insulation and damage the motor.

(5) Accident prevention

- Prepare a safety device such as an emergency braking device, to prevent the use of machinery and equipment in a more dangerous environment if the inverter has problems.

(6) Maintenance, inspection and parts replacement

- Do not test the control circuit of the inverter (insulation resistance measurement) with a high resistance meter.
- Regular inspection.

(7) Disposal

- Disposal as industrial waste after broken.

(8) General notes

- Most charts or drawings in this manual indicate that if the inverter is not equipped with a circuit breaker, enclosure or partial open circuit, the inverter must never be operated. When operating the inverter, always install the enclosure and circuit breaker, and observe the regulations in the installation manual.

H1 series nameplate

H1 00 S2 0007 B T 0

- 0: No built-in reactor
  1: Built-in DC reacttor
  2: Built-in AC reactor
  3: Built-in DC and AC reactors
- T: Built-in STO circuit X: No STO circuit
- B: Built-in brake unit X: No brake unit
- Power: kW
  First three digits: before the decimal point, one digit after the decimal point
  Example: 0007: 0.75kW
- S/T: Single-phase/Three-phase
  2/4: 220/380V
- Custom machine model
- Product model (H1 series)

H1 Series Specification

Frame NO.	Model	Input voltage	Input current(A)	Rated power (kW)	Output current(A)	Motor (kW)
F1	H100S20007BX0	Single-phase 220V	8.2	0.75	5.0	0.75
	H100S20015BX0	Single-phase 220V	14.0	1.5	7.0	1.5
F2	H100T20022BX0	Single-phase 220V	23.0	2.2	12.5	2.2
		Three-phase 220V	13.5			
F3	H100T20037BX0	Single-phase 220V	38.6	3.7	15.2	3.7
		Three-phase 220V	16.5			
	H100T20055BX0	Three-phase 220V	24	5.5	23	5.5
F4	H100T20075BX0	Three-phase 220V	37	7.5	31	7.5
	H100T20110BX0	Three-phase 220V	52	11	45	11
F1	H100T40007BX0	Three-phase 380V	4.0	0.75	3.0	0.75
	H100T40015BX0	Three-phase 380V	5.8	1.5	4.5	1.5
	H100T40022BX0	Three-phase 380V	6.5	2.2	5.6	2.2
F2	H100T40040BX0	Three-phase 380V	12.6	4.0	10.5	4.0
F3	H100T40055BX0	Three-phase 380V	16	5.5	14	5.5
	H100T40075BX0	Three-phase 380V	21	7.5	19	7.5
F4	H100T40110BX0	Three-phase 380V	28	11	26	11
	H100T40150BX0	Three-phase 380V	36	15	33	15
F5	H100T40185BX0	Three-phase 380V	42	18.5	40	18.5
	H100T40220BX0	Three-phase 380V	48	22	46	22
F6	H100T40300BX0	Three-phase 380V	62	30	58	30
	H100T40370BX0	Three-phase 380V	76	37	75	37
F7	H100T40450XX0	Three-phase 380V	92	45	90	45
	H100T40550XX0	Three-phase 380V	113	55	110	55
F8	H100T40750XX0	Three-phase 380V	157	75	150	75
	H100T40900XX0	Three-phase 380V	180	90	170	90
F9	H100T41100XX0	Three-phase 380V	214	110	210	110
	H100T41320XX0	Three-phase 380V	256	132	250	132
	H100T41600XX0	Three-phase 380V	307	160	300	160

CHAPTER 1 - Installation

1.1 Installation prevention

⚠ WARNING

- The inverter uses plastic parts, so be careful not to damage it.
  Do not grab the front keyboard to move the inverter in case of fall.
- The inverter is installed without vibration (5.9 m / s2 or less).
- Install the inverter within the allowable temperature range (-10 ~ 50C).
- The temperature of the inverter during operation is very high, and the inverter needs to be installed on a non-flammable surface.
- Install the inverter on smooth, vertical and horizontal surfaces. The direction of the inverter must be vertical for heat dissipation. At the same time, leave enough space around the inverter.

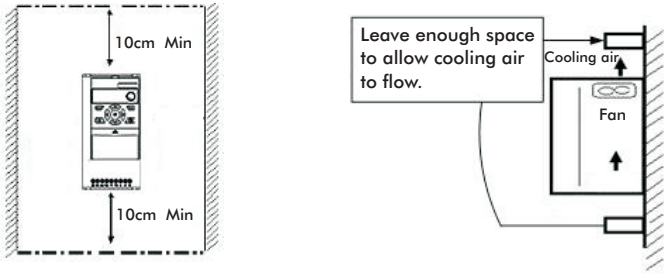

Chart 1-1 Installation instructions

Avoid moisture and direct sunlight.

Do not install the inverter in places with oil gas, flammable gas and dust. Install the inverter in a clean place or in a closed plate that isolates foreign materials.

When two or more inverters are installed on one space, the inverter or cooling fan must be installed in a suitable location to ensure that the surrounding temperature is within the allowable range.

When installing the inverter, use screws for fixing to ensure that the inverter is firmly installed.

CHAPTER 2 - Basic Configuration

2.1 Peripheral device connection

The following equipment is required to operate the inverter. Select appropriate peripheral device and connect it correctly to ensure normal operation. Fault application or installation of the inverter may cause system failure or reduce product life and damage components. Before proceeding, you must read and fully understand the manual.

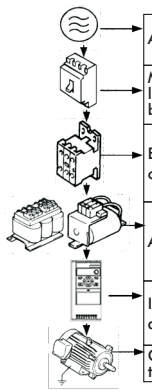

AC power	Please use the power supplywithin the allowable specifications of the inverter.
MCCB or earth leakage circuit breaker (ELB).	Choose an appropriate circuitbreaker. When the power is turned on, a large inrush current will flow into the inverter.
Electromagnetic contactor	Install it if necessary. After installation. do not use it for the purpose of starting or stopping. 0therwise, it may cause a reduction in product life.
AC/DC reactor	Choosing an appropriate reactor can suppress higher harmonics and improve power factor. Use it as close to the inverter as possible.
Installation and connection	Install the inverter in a suitable place and maintain a good ground. Incorrect connection may cause damage to the device.
Connect the motor	Please select inverter motor for long-term low-speed operation.

Chart 2-1 Diagram connection of outside equipments and inverter

2.2 List of main circuit applicable devices and their electrical specifications

Voltage class (V)	Inverter rated power (kW)	Motor (kW)	Inverter input		Recommended wiring size(mm²)			
			Air-switch model	Contactor model	Power line (input/output line)	DC reactor	Braking circuit	Control signal wire (external wiring)
220	0.75	0.75	DZ20-100(16A)	CJ20-16	2.5	4	2.5	0.5~0.75
	1.5	1.5						
	2.2	2.2	DZ20-100(32A)	CJ20-40	4	6	4	
	3.7	3.7						
	5.5	5.5	DZ20-100(32A)	CJ20-40	4	6	4	
	7.5	7.5	DZ20-100(50A)	CJ20-40	6	6	4	
	11	11	DZ20-100(63A)	CJ20-63	8	8	6	
380	0.75	0.75	DZ20-100(16A)	CJ20-16	1.5	4	1.5	
	1.5	1.5						
	2.2	2.2			2.5		2.5	
	4.0	4.0						
	5.5	5.5	DZ20-100(32A)	CJ20-25	4	6	4	
	7.5	7.5						
	11	11	DZ20-100(50A)	CJ20-40	6			
	15	15			8	8		
	18.5	18.5			10		6	
	22	22	DZ20-100(63A)	CJ20-63		16		
	30	30	DZ20-100(80A)	CJ20-63	10	16	6	
	37	37	DZ20-100(100A)	CJ20-100	16	16	6	
	45	45			25	25	8	
	55	55	DZ20-200(200A)	CJ20-160	35	25*2(50)		
	75	75			50	35*2(70)	10	
	90	90	DZ20-400(250A)	CJ20-250	70	50*2(95)	16	
	110	110			50*2(95)		25	
	132	132	DZ20-400(400A)	CJ20-400		70*2(150)		
	160	160						

CHAPTER 3 - Wiring

3.1 Main circuit and function card

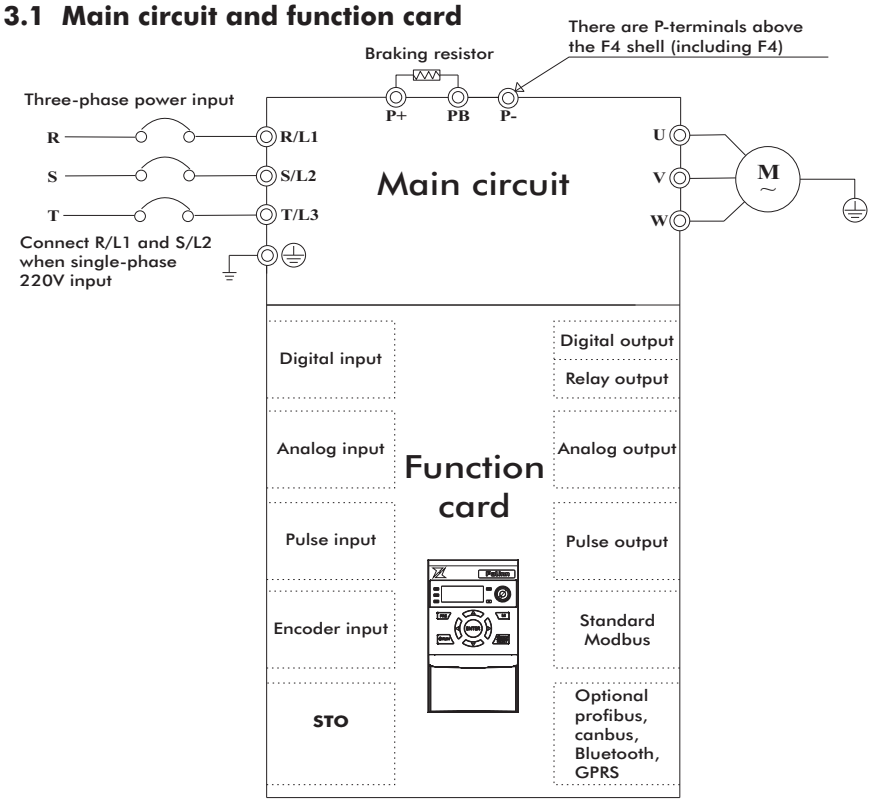

Chart 3-1 Main circuit and function card

Note: Different function cards connect to different terminals. In addition to standard function cards, any type of card can be customized.
When using different function cards, the parameters need to be reset.

⚠ Warning: It is strictly forbidden to plug and unplug the function card with power on!

3.2 Power terminal wiring instructions

⚠ Warning

- For 220V class inverter, use class 3 grounding method (grounding resistance: less than 100Ω).
- For 380V class inverter, use class 3 grounding method (grounding resistance: less than 10Ω).
- Use special grounding terminal for grounding. Do not use screws for grounding in the box.
- Note: Grounding steps
  (1) Determine the location of the ground terminal.
  (2) Connect the ground-wire to the ground terminal and make sure that the screws are tight.

3.3 Main circuit terminal description

Terminal symbol	Terminal name	Function description
⏚	Ground terminal	Inverter safety ground
R/L1、S/L2、T/L3	Main circuit power input terminal	Connect three-phase power, single-phase power to R / L1, S / L2
P+、PB	Brake terminal	Connect external braking resistor
P+、P−	DC bus terminal	when two or more inverters share a DC bus(There are P-terminals above the F4 shell (including F4))
U、V、W	Inverter output terminal	Connect a three-phase motor

- Please implement the wiring in accordance with the regulations of electrician regulations to ensure safety When selection of the wire diameter specification
- It is best to use isolated wires or conduits for power wiring, and ground the isolation layer or conduits at both ends.
- Be sure to install the air disconnect switch NFB between the power supply and the input terminals (R / L1, S / L2, T / L2)
- Do not connect the AC power supply to the output terminal (U V W) of the inverter.
- The output wiring must not touch the metal shell of the inverter, in case of a short circuit to ground.
- Do not use phase shift capacitors, LC / RC noise filters and other components at the output of the inverter.
- The main circuit wiring of the inverter must be far away from other control equipment.
- When the wiring between the inverter and the motor exceeds 15 meters (220V level),(380V level 30 meters), a high dV / dT will be generated inside the motor coil, which will produce interlayer insulation of the motor then damaged, please use a special motor for the inverter or install a reactor on the inverter side.

Ground wire:

- Please correctly ground the grounding wire terminal PE:
  220V level: The 3 class grounding (grounding resistance below 100Ω).
  380V level: Special 3 class grounding (grounding resistance below 10Ω).
- For the use of the ground wire, please follow the basic length and size of the electrical equipment technology.
- Use special grounding terminal for grounding. Do not use screws for grounding in the box.
- Absolutely avoid public grounding with large power equipment such as welding machines, power machinery, etc. The ground wire should be as far away as possible from the ground wire of large power equipment.
- The ground wiring must be as short as possible.
- Note: Grounding steps
  (1) Remove the front keyboard
  (2) Connect the ground wire to the ground terminal and ensure that the screws are tight.

3.4 Function card configuration table

H 0001
- Function configuration
- HOUSING: Sk10:1; SK20:2; Sk30:3; ……
- Reserve
- Built in function card

Board name	H0100	H0101	H0102	H0103	H0104	H0110	H0120	H0130	H0131	H0200	H0201	H0300	H0310	H0320	H0350
Shell model	SK10									SK20		SK30			
Appearance															

Function card / Physical characteristics	H0100	H0101	H0102	H0103	H0104	H0110	H0120	H0130	H0131	Conti-nuous update	H0200	H0201	Conti-nuous update	H0300	H0310	H0320	H0350	Conti-nuous update
Digital input	2	4	1	4	2	5	10	5	1	……	10	10	……		4	5	3	……
Digital output							1			……			……					……
Relay output	1	1		3	1	2	2	2	1	……	3	3	……		1	1	1	……
Analog input	1	1		1	1	1	1	1		……	2	2	……		2	1		……
Analog output						2	1	2		……	2	2	……		2	2		……
Pulse input										……			……					……
Pulse output										……			……					……
Encoder input										……			……					……
Modbus	1	1	1	1		1	optional	1	1	……	1	1	……		1	1	1	……
STO										……	1		……					……
Display	Digital tube	Digital tube	Digital tube	Digital tube	Digital tube	Digital tube	Digital tube	Digital tube	Digital tube	……	Digital tube	Digital tube	……		Digital tube	Digital tube	Digital tube	……
Potentiometer	Analog	Analog		Analog	Analog	Analog	Analog	Analog		……			……		Analog	Analog		……
Toggle switch										……			……	1	2	2		……
10V power supply		1		1	1	1	1	1		……	1	1	……		1			……
12V power supply				1			1	1	1	……	1	1	……		1			……

Note:
1. the built-in function card with STO function must be equipped with AC drive of STO circuit, for example: H0200 built-in function card is equipped with AC drive with model H100T40040BT0 (the second T represents built-in STO circuit).
2. If need other types and numbers of terminals, contact the company for bulk customization

CHAPTER 4 - Keyboard

4.1 Keyboard Features

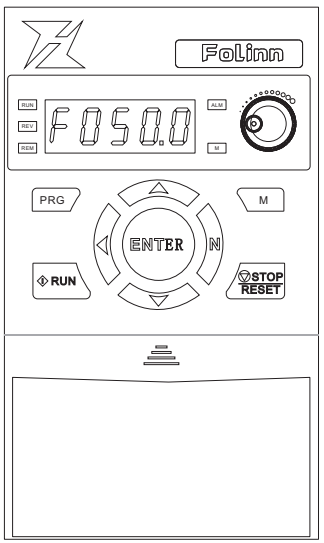

No.	Construction	Function explain
1	F050.0	Display
2	PRG	Programming/ Exit key
3		In the state display interface, it is the state switch key; in other interfaces, it is the left shift key
4	N	Reserved key
5	RUN	Run key
6		Potentiometer: see parameter P01.63
7		In programming mode, value change key; In non-programming mode, increasing and decreasing (UP / DOWN) selection key. See parameters P01.63, P02.03, P02.04
8		
9	ENTER	Enter
10	STOP RESET	Stop/reset
11	M	Customized key

Indicator light	State	Function Detail
RUN	Light / Flash	Running/Decelerate
REV	Light	Reversing
REM	Light	Remote operation
ALM	Light	Fault indication
M	Light	Customer customized instructions, fault alarm instructions, see parameters P01.66 and P01.67.

4.2 Keyboard operation

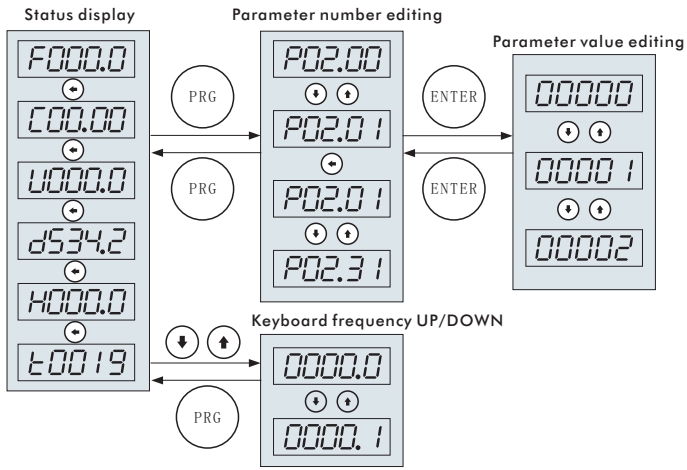

Item	Description	Item	Description
F	Output frequency	H	Display value 1 (selected by P01.68)
C	Output current	t	Display value 2 (selected by P01.69)
U	Output voltage	A	Alarm
d	DC bus voltage	E	Fault

4.3 Character display

0	0	A	A	K	K	U	U
1	1	b	B	L	L	u	V
2	2	C	C	n	M	W	W
3	3	d	D	n	N	X	X
4	4	E	E	O	O	Y	Y
5	5	F	F	P	P	Z	Z
6	6	G	G	q	Q		
7	7	H	H	r	R		
8	8	I	I	S	S		
9	9	J	J	t	T		

CHAPTER 5 - Quick get start

Note:
Some parameters have been set at the factory (factory value), and do not be set for the first use.

5.1 Set the motor rated parameters

After power on, use the operation keyboard to set the parameters as the following table. According to the motor nameplate for motor parameters.

Parameter number	Function	Parameter number	Function
P06.11	Motor rated Power	P06.14	Motor rated current
P06.12	Motor rated Voltage	P06.15	Motor rated speed
P06.13	Motor rated frequency		

5.2 Use the keyboard to control the start-stop and use the keyboard potentiometer to set the operating frequency

5.2.1 Power on. Use the operation keyboard to set the motor parameters (P06.11 ~ P06.15), keyboard potentiometer to control speed and acceleration / deceleration time (P02.50, P02.70).

Parameter number	Function	Set value	Detail
P01.63	Keyboard settings source	1 (Factory Value)	The operating frequency is set by the keyboard potentiometer
P02.10	Set value source 1	0 (Factory Value)	The operating frequency is set by the keyboard
P03.00	Start command source	1 (Factory Value)	Operation keyboard to run command channel
P02.50	Acceleration time 0	–	The acceleration time is adjusted according to actual needs
P02.70	Deceleration time 0	–	The deceleration time is adjusted according to actual needs

5.2.2 Press the RUN key on the operation keyboard to start the inverter, rotate the potentiometer on the keyboard to adjust the set frequency, and press the STOP key to stop the inverter.

5.3 Use the terminals to control start-stop and use the keyboard to set operating frequency

5.3.1 Terminal S1 is for forward signal input, and S2 is for reverse signal input. The wiring is as shown in the figure below.

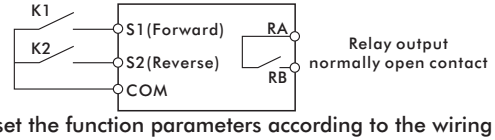

5.3.2 Power on, then set the function parameters according to the wiring diagram, see the table as below.

Parameter number	Function	Set value	Detail
P01.63	Keyboard settings source	0	Keyboard setting source is set by P02.92 number
P02.03	Source of incremental command (UP)	1	Increment command (UP) source keyboard
P02.04	Source of decrement command (DOWN)	1	Decrease command (DOWN) source keyboard
P02.10	Set value source 1	0 (Factory Value)	The operating frequency is set by the keyboard
P02.92	Keyboard set value	–	Operating frequency, relative to P02.18 percentage
P02.50	Acceleration time 0	–	Acceleration time is adjusted according to actual needs
P02.70	Deceleration time 0	–	Deceleration time is adjusted according to actual needs
P03.00	Start command source	3	Forward running function (terminal forward rotation signal input)
P03.01	Reverse start command source	4	Reverse running function (terminal reverse signal input)

5.3.3 When K1 in the wiring diagram is closed, the motor runs forward; when K1 is disconnected, the motor stops running. When K2 is closed, the motor runs in reverse; when K2 is disconnected, the motor stops running. When K1 and K2 are closed or opened at the same time, the motor stops running. You can increase / decrease the set frequency by set the value of P02.92 or pressing ▲ and ▼ on the operation keyboard.

5.4 Use the terminals to control start-stop and use analog to set operating frequency

5.4.1 Terminal S1 is for forward signal input, and S2 is for reverse signal input.
The wiring is shown in the figure below.

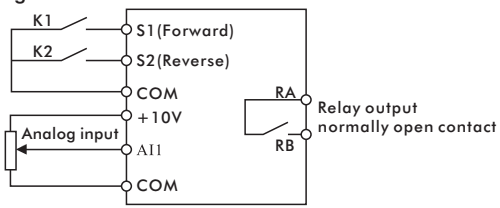

5.4.2 Power on, then set the function parameter table according to the wiring diagram, see the table below.

Parameter number	Function	Set value	Detail
P02.10	Set value source 1	2	The operating frequency is set by analog quantity AI1
P02.50	Acceleration time 0	–	The acceleration time is adjusted according to the actual demand
P02.70	Deceleration time 0	–	The deceleration time is adjusted according to the actual demand
P03.00	Start command source	3	Forward rotation function (terminal forward rotation signal input)
P03.01	Reverse start command source	4	Reverse function (terminal reverse signal input)

5.4.3 Set the operating frequency by adjusting the AI1 analog input.
5.4.4 When K1 in the wiring diagram is closed, the motor runs forward; when K1 is disconnected, the motor stops running. When K2 is closed, the motor runs in reverse; when K2 is disconnected, the motor stops running. When K1 and K2 are closed or opened at the same time, the motor stops running.

5.5 Process control PID: Multi-speed 0 is set value, AI1 is feedback value

5.5.1 Terminal S1 is the forward signal input, AI1 is the feedback signal input.
The wiring is shown below.

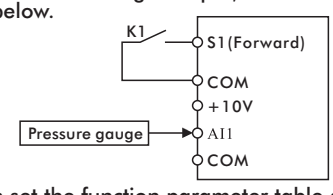

5.5.2 Power on, then set the function parameter table according to the wiring diagram, see the table below.

Parameter number	Function	Set value	Detail
P02.10	Set value source 1	1	PID set value selected multi-step speed 0: 100% of full scale
P02.11	Set value source 2	2	PID feedback selected analog AI1: 10V corresponds to full scale
P02.13	Set channel relationship	8	Activate PID control
P02.30	Multi-speed 0	–	PID set pressure
P03.00	Start command source	3	Select S1 as the source of the operation command
P04.00	PID proportional gain	–	Set as required, the greater the value, the faster the adjustment
P04.01	PID integration time	–	Set as required, the smaller the value, the faster the adjustment
P01.68	Keyboard H monitoring item selection	1090	Item H displays P10.90, which is the PID setting value
P01.69	Keyboard t monitoring item selection	1091	The t item shows P10.91, which is the PID feedback value

5.5.3 Adjust the P02.30 to get the desired pressure.
5.5.4 When K1 in the wiring diagram is closed, the system starts to run.

5.6 Use the terminals to control start-stop and use communication to set running frequency

5.6.1 Terminal S1 is for forward signal input and S2 is for reverse signal input.
The wiring is as shown in the figure below.

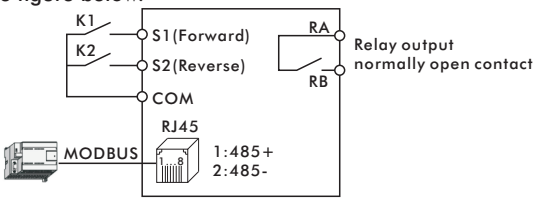

5.6.2 Power on, then set the function parameters according to the wiring diagram, see the table below.

Parameter number	Function	Set value	Detail
P01.40	Communication Protocol	1 (Factory Value)	MODBUS RTU
P01.41	Address	1 (Factory Value)	Slave address 1
P01.42	Baud rate	3 (Factory Value)	19200bps
P01.43	Parity check	0 (Factory Value)	No check
P01.45	Stop bit	1.0 (Factory Value)	1 bit
P02.10	Set value source 1	5	MODBUS communication settings
P02.50	Acceleration time 0	–	The acceleration time is adjusted according to actual needs
P02.70	Deceleration time 0	–	Deceleration time is adjusted according to actual needs
P03.00	Start command source	3	Forward rotation function (terminal forward rotation signal input)
P03.01	Reverse start command source	4	Reverse function (terminal reverse signal input)

5.6.3 When K1 in the wiring diagram is closed, the motor runs forward; when K1 is disconnected, the motor stops running. When K2 is closed, the motor runs in reverse; when K2 is disconnected, the motor stops running. When K1 and K2 are closed or opened at the same time, the motor stops running
5.6.4 Modify the running frequency by writing register 0x0121 through MODBUS communication (function code 0x06). For example: modify the running frequency 25Hz of slave address 1, see the table below.

	Address	Function code	Register address		Register content		Sum of Check	
Request frame	0x01	0x06	0x01	0x21	0xC3	0x50	0x88	0xF0
Reply frame	0x01	0x06	0x01	0x21	0xC3	0x50	0x88	0xF0

5.7 Use communication to control start-stop and communication to set operating frequency

5.7.1 Connect the communication cable as shown below.

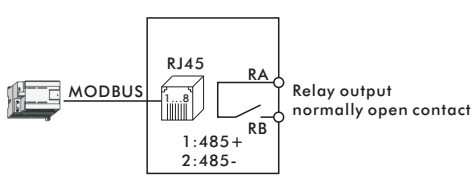

5.7.2 Power on, then set the function parameters according to the wiring diagram, see the table below.

Parameter number	Function	Set value	Detail
P01.40	Communication Protocol	1 (Factory Value)	MODBUS RTU
P01.41	Address	1 (Factory Value)	Slave address 1
P01.42	Baud rate	3 (Factory Value)	19200bps
P01.43	Parity check	0 (Factory Value)	No check
P01.45	Stop bit	1.0 (Factory Value)	1 bit
P02.10	Set value source 1	5	MODBUS communication settings
P02.50	Acceleration time 0	–	The acceleration time is adjusted according to actual needs
P02.70	Deceleration time 0	–	The deceleration time is adjusted according to actual needs
P03.00	Start command source	2	MODBUS communication start-stop

5.7.3 Start or stop the inverter whose slave address is 1 by writing register 0x0122 through MODBUS communication (function code 0x06).

Such as: start command, see the table below.

	Address	Function code	Register address		Register content		Sum of Check	
Request frame	0x01	0x06	0x01	0x22	0x00	0x01	0xE9	0xFC
Reply frame	0x01	0x06	0x01	0x22	0x00	0x01	0xE9	0xFC

Such as: stop command, see the table below.

	Address	Function code	Register address		Register content		Sum of Check	
Request frame	0x01	0x06	0x01	0x22	0x00	0x10	0x29	0xF0
Reply frame	0x01	0x06	0x01	0x22	0x00	0x10	0x29	0xF0

5.7.4 Modify the operating frequency by writing register 0x0121 through MODBUS communication (function code 0x06). For example: modify the running frequency 20Hz of slave address 1, see the table below.

	Address	Function code	Register address		Register content		Sum of Check	
Request frame	0x01	0x06	0x01	0x21	0x9C	0x40	0xB0	0xCC
Reply frame	0x01	0x06	0x01	0x21	0x9C	0x40	0xB0	0xCC

CHAPTER 6 - Function parameter list

Classify	Parameter number	Function	Setting range	Unit	Factory Value
01: System configuration	P01.11	Parameter operation	0: Normal Operation; 1: Parameter Initialization, initialization parameters other than P01.XX; 2: Initialize all parameters		0
	P01.13	Set keyword	0~9999		0
	P01.14	Set keyword confirmed	0~9999		0
	P01.15	Input keyword	0~9999		0
	P01.19	Parameter page number	0~4		0
	P01.20	Macro-program	0~9999		0
	P01.21	Recipe	0~10000		0
	P01.30	Set virtual terminal	0~199:Value setting; 200~9999:Address		0
	P01.32	Virtual address 1	0~4294967295		0
	P01.33	Virtual address 2	0~4294967295		0
	P01.34	Virtual address 3	0~4294967295		0
	P01.35	Virtual address 4	0~4294967295		0
	P01.36	Virtual address 5	0~4294967295		0
	P01.37	Virtual address 6	0~4294967295		0
	P01.38	Virtual address 7	0~4294967295		0
	P01.39	Command mode	0:Single Command source mode; 1:Multi-command source mode		0
	P01.40	Communication protocol	0:Reserved; 1:MODBUS RTU; 2~6:Reserved		1
	P01.41	Address	0~247		1
	P01.42	Baud rate	0: 2400; 1: 4800; 2: 9600; 3: 19200; 4: 38400; 5~10: Reserved	bps	3
	P01.43	Parity check	0:No Check; 1:Even check; 2:Odd check		0
	P01.44	Data bit	7~8	bit	8
	P01.45	Stop bit	0.0~2.0	bit	1.0
	P01.46	Communication delay time	0~100		3
	P01.47	Parameter decimal mode	0~123		0
	P01.63	Keyboard settings source	0: Keyboard numeric setting (P02.92); 1: Keyboard potentiometer setting		1

Classify	Parameter number	Function	Setting range	Unit	Factory Value
	P01.66	Keyboard M light source	0: Always 0; 1: Always 1; 2: Stopped; 3: Running; 4: Fault; 5: Warning; 6: Reversing; 7: Ready; 64: STO state; 100 ~ 9999: Address		5
	P01.67	Keyboard M light source bit	0~31		0
	P01.68	Display value 1 source	0~9999		1011
	P01.69	Display value 2 source	0~9999		1091
02: set channel	P02.00	Multi-speed source	0~11111111 Units: S1; Tens: S2; Hundreds: S3; . . .		0
	P02.01	Source of acceleration time			0
	P02.02	Source of deceleration time			0
	P02.03	Source of incremental command (UP)	Units: Keyboard; Tens: Communication; Hundreds: S1; Thousands: S2; ...		0
	P02.04	Source of decrement command (DOWN)			0
	P02.10	Set value source 1	0: Keyboard; 1: Multi-speed; 2: AI1; 3: AI2; 5: Communication; 9: Pulse input; 200 ~ 9999: Address		0
	P02.11	Set value source 2			0
	P02.12	Set value source 3			0
	P02.13	Set channel 1 relationship selection	0:F1; 1:F2; 2:F1+F2; 3:F1-F2; 4:F1*F2/100; 5:Maximum value(F1,F2); 6:Minimum value(F1,F2) ; 7:Average value(F1,F2) ; 8:PID(F1,F2)		0
	P02.14	Set channel 2 relationship selection			0
	P02.18	Maximum setting value	0.000~99999.000		50.000
	P02.19	Minimum setting value			0.000
	P02.20	Avoid-frequency 1 start point	-1000.000~1000.000	%	0.000
	P02.21	Avoid-frequency 1 stop point			
	P02.22	Avoid-frequency 2 start point			
	P02.23	Avoid-frequency 2 stop point			
	P02.24	JOG frequency	-1000.000~1000.000	%	10.000

Function parameter list

Classify	Parameter number	Function	Setting range	Unit	Factory Value
02: set channel	P02.26	Increase and decrease (UP / DOWN) Step-frequency	-100.0~100.0	%	0.2
	P02.27	Increase and decrease (UP / DOWN) memory selection	0: No memory; 1: Only power down memory; 2: Only stop memory; 3: Both power down and stop memory		3
	P02.28	Speed up and down frequency	-1000.000~1000.000	%	0.000
	P02.30	Multi-speed 0	-1000.000~1000.000	%	0.000
	P02.31	Multi-speed 1			
	P02.32	Multi-speed 2			
	P02.33	Multi-speed 3			
	P02.34	Multi-speed 4			
	P02.35	Multi-speed 5			
	P02.36	Multi-speed 6			
	P02.37	Multi-speed 7			
	P02.38	Multi-speed 8			
	P02.39	Multi-speed 9			
	P02.40	Multi-speed 10			
	P02.41	Multi-speed 11			
	P02.42	Multi-speed 12			
	P02.43	Multi-speed 13			
	P02.44	Multi-speed 14			
	P02.45	Multi-speed 15			
	P02.50	Acceleration time 0	0.050~3600.000	s	*
	P02.51	Acceleration time 1			
	P02.52	Acceleration time 2			
	P02.53	Acceleration time 3			
	P02.54	Acceleration time 4			
	P02.55	Acceleration time 5			
	P02.56	Acceleration time 6			
	P02.57	Acceleration time 7			
	P02.58	Acceleration time 8			
	P02.59	Acceleration time 9			
	P02.60	Acceleration time 10			
	P02.61	Acceleration time 11			
	P02.62	Acceleration time 12			
	P02.63	Acceleration time 13			
	P02.64	Acceleration time 14			
	P02.65	Acceleration time 15			
	P02.66	JOG acceleration time	0.050~3600.000	s	5.000
	P02.68	S curve acceleration time 1	0.000~100.000	%	0.000
	P02.69	S curve acceleration time 2			

Function parameter list

Classify	Parameter number	Function	Setting range	Unit	Factory Value
02: set channel	P02.70	Deceleration time 0	0.050~3600.000	s	*
	P02.71	Deceleration time 1			
	P02.72	Deceleration time 2			
	P02.73	Deceleration time 3			
	P02.74	Deceleration time 4			
	P02.75	Deceleration time 5			
	P02.76	Deceleration time 6			
	P02.77	Deceleration time 7			
	P02.78	Deceleration time 8			
	P02.79	Deceleration time 9			
	P02.80	Deceleration time 10			
	P02.81	Deceleration time 11			
	P02.82	Deceleration time 12			
	P02.83	Deceleration time 13			
	P02.84	Deceleration time 14			
	P02.85	Deceleration time 15			
	P02.86	Jog deceleration time	0.050~3600.000	s	5.000
	P02.87	Safe deceleration time	0.050~3600.000	s	5.000
	P02.88	S curve deceleration time 1	0.000~100.000	%	0.000
	P02.89	S curve deceleration time 2			
	P02.90	Communication set value	-1000.000~1000.000	%	0.000
	P02.91	Communication command	0~4294967295		0
	P02.92	Keyboard set value	-1000.000~1000.000	%	100.000
	P02.93	Keyboard command	0~4294967295		0
03: Input and output	P03.00	Start command source	0 ~ 4294967295 Single command source mode (P01.39 = 0): 0: No effect; 1: Keyboard; 2: Communication; 3: S1; 4: S2; ... 17 ~ 32: The 0 ~ 15 bits of P01.30 Multi-command source mode (P01.39 = 1): bit0: Keyboard; bit1: Communication; bit2: S1; bit3: S2; ... bit16~bit31:The 0~15 bit of P01.30		1
	P03.01	Reverse start command source			0
	P03.02	Reverse command source			0
	P03.03	JOG command source			1
	P03.04	Stop command source			0
	P03.05	Free parking command source			0
	P03.06	Safe stop command source			0
	P03.07	Reset command source			1
	P03.08	Fault command source			0
	P03.09	Pause command source			0
	P03.20	S1 type	One place: 0: Positive logic; 1: Reverse logic; 2: Rising edge; 3: Falling edge Tens place: 1: Rising edge toggle; 2: Falling edge toggle Hundreds place: 1: The edge signal is not cleared by other edge signals Thousands place: 1: The edge signal is not cleared by the stop signal		0
	P03.21	S2 type			
	P03.22	S3 type			
	P03.23	S4 type			
	P03.24	S5 type			
	P03.25	S6 type			
	P03.26	S7 type			
	P03.27	S8 type			

Classify	Parameter number	Function	Setting range	Unit	Factory Value
03: Input and output	P03.28	S Input filtering	1~16		4
	P03.29	Start signal enable mode	0: Always enabled; 1: Need to re-enable after power on; 2: Need to re-enable after free stop or safe stop; 3: Need to re-enable after power-on, free stop or safe stop.		0
	P03.30	Y1 terminal source (RA、RB、RC or RA1、RB1、RC1)	0: Always 0; 1: Always 1; 2: Stopped; 3: Running; 4: Fault; 5: Warning; 6: Reversing; 7: Ready; 64: STO state; 100 ~ 9999: Address		3
	P03.31	Y1 terminal source bit	0~31		0
	P03.32	Y2 terminal source (RA2、RB2、RC2)	0: Always 0; 1: Always 1; 2: Stopped; 3: Running; 4: Fault; 5: Warning; 6: Reversing; 7: Ready; 64: STO state; 100 ~ 9999: Address		4
	P03.33	Y2 terminal source bit	0~31		0
	P03.34	Y3 terminal source (RA3、RB3、RC3)	0: Always 0; 1: Always 1; 2: Stopped; 3: Running; 4: Fault; 5: Warning; 6: Reversing; 7: Ready; 64: STO state; 100 ~ 9999: Address		5
	P03.35	Y3 terminal source bit	0~31		0
	P03.36	Y1 output delay time	0.000~6000.000	s	0.000
	P03.37	Y2 output delay time			
	P03.38	Y3 output delay time			
	P03.39	AI filter time	0.100~600.000	s	0.100
	P03.40	AI1 signal type	0: Voltage input; 1: Current input		0
	P03.41	AI1 low-end voltage (current)	-999999.000~999999.000	V(mA)	0.000
	P03.42	AI1 high-end voltage (current)			10.000
	P03.43	AI1 low-end setting	-999999.000~999999.000	%	0.000
	P03.44	AI1 high-end setting			100.000
	P03.45	AI2 signal type	0: Voltage input; 1: Current input		0
	P03.46	AI2 low-end voltage (current)	-999999.000~999999.000	V(mA)	0.000
	P03.47	AI2 high-end voltage (current)			10.000
	P03.48	AI2 low-end setting	-999999.000~999999.000	%	0.000
	P03.49	AI2 high-end setting			100.000

Classify	Parameter number	Function	Setting range	Unit	Factory Value
03: Input and output	P03.60	AO1 signal type	0: Voltage output; 1: Current output		0
	P03.61	AO1 signal source	0: Always 0; 1: Always 10V / 20mA; 2: Output frequency; 3: Motor current; 4: Output voltage; 5: Motor torque; 6: Output power; 7: Set frequency; 100~999: Refer to the value of parameter numberr		2
	P03.62	AO1 low-end setting	-999999.000~999999.000		0.000
	P03.63	AO1 high-end setting			50.000
	P03.64	AO1 low-end voltage (current)	-999999.000~999999.000	V(mA)	0.000
	P03.65	AO1 high-end voltage (current)			10.000
	P03.66	AO2 signal type	0: Voltage output; 1: Current output		0
	P03.67	AO2 signal source	0: Always 0; 1: Always 10V / 20mA; 2: Output frequency; 3: Motor current; 4: Output voltage; 5: Motor torque; 6: Output power; 7: Set frequency; 100~999: Refer to the value of parameter numberr		3
	P03.68	AO2 low-end setting	-999999.000~99999.000		0.000
	P03.69	AO2 high-end setting			50.000
	P03.70	AO2 low-end voltage (current)	-999999.000~999999.000	V(mA)	0.000
	P03.71	AO2 high-end voltage (current)			10.000
04: PID control	P04.00	PID proportional gain	0.000~10.000	%	0.010
	P04.01	PID integration time	0.001~9999.000	s	10.000
	P04.02	PID differential gain	0.000~9999.000	%	0.000
	P04.03	PID forward feedback coefficient	0~500	%	0
	P04.04	PID sampling time	0.001~9999.000	s	0.004
	P04.05	PID output upper limit	-1000.000~1000.000	%	100.000
	P04.06	PID output lower limit		%	0.000
	P04.07	PID output filter time	0.000~600.000	s	0.000
	P04.09	PID range	0.001~99999.000		100.000
	P04.11	PID sleep frequency	0.000~500.000	%	0.000
	P04.12	PID enter sleep time	0.000~3600.000	s	0.000
	P04.13	PID wake-up deviation	0.000~100.000	%	0.000
	P04.14	PID enter wake-up time	0.000~3600.000	s	0.000
	P04.15	PID sleep action	0: Do not sleep; 1: PID stop; 2: Decelerate to stop; 3: Free to stop; 4: Pause; 5: Lowest frequency operation		0
	P04.90	PID status	0~4294967295		

Classify	Parameter number	Function	Setting range	Unit	Factory Value
05: System control	P05.00	Control mode	0: VF; 1: Open loop vector 1		1
	P05.06	Forward and reverse switching time	0.000~6000.000	s	0.000
	P05.07	Forced change direction	0: No effect; 1: Forced change direction		0
	P05.08	Motor frequency upper limit	-1020.000~1020.000	Hz	55.000
	P05.10	start-up function	0: When the time of P05.11 is over, frequency start by pressing P05.12; 1: On speed start; 2: DC injection 3: Run at the frequency of P05.12 within the time of P05.11		0
	P05.11	Start time	0.000~60000.000	s	0.000
	P05.12	Start frequency	0.000~100.000	Hz	0.000
	P05.14	On speed start mode	0: All directional; 1: Set value direction; 2 ~ 3: Reserved		0
	P05.19	DC injection current	0.000~200.000	%	100.000
	P05.20	Stop function	Units: 0: Free parking; 1: DC braking; Ten: 1: Precise parking		0
	P05.21	Stop frequency	0.000~1000.000	Hz	0.000
	P05.22	DC braking	0.000~300.000	%	100.000
	P05.23	DC braking time	0.000~1000.000	s	0.000
	P05.24	Demagnetization time ratio	0.000~1000.000	%	10.000
	P05.26	Magnetic flux brake activation frequency	0.000~1000.000	Hz	0.000
	P05.27	Magnetic flux braking coefficient	100~200	%	100
	P05.28	Magnetic flux braking time	0.000~1000.000	s	0.000
	P05.30	Brake resistance mode	0: Invalid; 1: Maximum duty cycle		1
	P05.50	Auto reset mode	0~9999		0
	P05.51	Auto reset time	0.000~600.000	s	10.000
	P05.60	Auto energy saving minimum magnetic flux	30~100	%	100
	P05.61	Auto energy saving start frequency	0.000~200.000	Hz	5.000
	P05.63	Manual energy saving magnetic flux	30~90	%	70
	P05.71	Current upper limit	0~300	%	150
	P05.76	Upper limit of electric torque	0.000~900.00	%	150.000
	P05.77	Upper limit of regenerative torque	0.000~900.000	%	150.000
	P05.80	Over-voltage control	0: Invalid; 1: Valid at all times		1
	P05.82	Over-voltage control scale coefficient	0~200	%	100
	P05.83	Over-voltage control integral coefficient	1~10000	%	100

Classify	Parameter number	Function	Setting range	Unit	Factory Value
05: System control	P05.85	Under-voltage control	Units: grid power-down action mode 0: Invalid; 1: Instantaneous stop no stop; 2: Safe parking; 3 ~ 6: Reserved Tens: under-voltage action mode of power grid 0: Invalid; 1: Safe frequency reduction		0
	P05.86	Power grid voltage level	100~800	V	*
	P05.90	AVR function selection	0: Invalid; 1: Valid; 2: Only invalid when decelerating		1
	P05.91	AVR function damping factor	0~100	%	100
06: Motor model	P06.00	Motor parameter self-learning	0: Invalid 1: Complete self-learning 2: Simple self-learning		0
	P06.05	Carrier frequency	2~16	kHz	*
	P06.06	Over-modulation function	0: Invalid; 1: Valid		1
	P06.10	Motor type	0: Asynchronous motor; 1: Surface mount permanent magnet synchronization; 2: Salient pole permanent magnet synchronization 4: Single-phase motor		0
	P06.11	Motor rated Power	0.000~100000.000	kW	*
	P06.12	Motor rated voltage	0~1000	V	*
	P06.13	Motor rated frequency	1~3000	Hz	*
	P06.14	Motor rated current	0.00~1000.00	A	*
	P06.15	Motor rated speed	10~65535	rpm	*
	P06.16	Motor power factor	0.00~1.00		*
	P06.17	Number of motor poles	2~100		*
	P06.18	Motor rated torque	0.1~10000.0	N·m	*
	P06.19	Motor no-load current	0.00~1000.00	A	*
	P06.20	PM motor back EMF/rev	1.000~10000.000	mV/rpm	*
	P06.40	Stator impedance	0.000~99.990	Ω	*
	P06.41	Rotor impedance	0.000~99.990	Ω	*
	P06.42	Stator leakage reactance	0.000~999.990	mH	*
	P06.44	Motor main reactance	0.00~999.90	mH	*
	P06.50	PM d-axis reactance	0.000~1000.000	mH	*
	P06.51	PM q-axis reactance	0.001~9999.000	mH	*
	P06.52	PM d-axis reactance saturation coefficient	0.0~100.0	%	*
	P06.53	PM q-axis reactance saturation coefficient	0.0~100.0	%	*
	P06.54	Maximum field weakening current d	10~400	%	100
	P06.55	Maximum field weakening current q	10~400	%	100
	P06.60	Single-phase motor turns ratio	0.200~1.800		1.000
	P06.70	Load type	0: Constant torque; 1: Fan water pump; 2: Promotion; 3: Reserved		0
	P06.80	Motor cable compensation strength	0~500		0

Classify	Parameter number	Function	Setting range	Unit	Factory Value
07: Control algorithm	P07.50	Slip compensation	-500~500	%	100
	P07.51	Slip compensation filter constant	1~10000	%	100
	P07.52	Resonance suppression coefficient	0~10000	%	100
	P07.53	Low-speed suppression filter constant	1~10000	%	100
	P07.54	High-speed suppression filter constant	1~10000	%	100
	P07.55	Automatic torque boost coefficient	0~300	%	100
	P07.57	Low speed minimum current	0~300	%	50
	P07.58	Static friction lift coefficient	0~10000	%	100
	P07.59	Static friction lift time	0.0~1000.0	s	0.0
	P07.71	VF curve-F1	0.0~3000.0	Hz	50.0
	P07.72	VF curve-F2			50.0
	P07.73	VF curve-F3			50.0
	P07.74	VF curve-F4			50.0
	P07.75	VF curve-V0	0~10000	V	0
	P07.76	VF curve-V1			*
	P07.77	VF curve-V2			*
	P07.78	VF curve-V3			*
	P07.79	VF curve-V4			*
09: System protect	P09.00	Input phase loss action	0: Fault; 1: Alarm; 2: Invalid		2
	P09.04	Output phase loss detection	0: Invalid; 1: Valid		1
	P09.06	ETR selection	0: Invalid; 1: Alarm; 2: Fault		2
	P09.49	STO display selection	0: STO/STO1/STO2/STO3 state is not displayed; 1: Display alarm in STO state; 2: Display fault in STO state		0
10: System status	P10.05	Software version number			
	P10.10	Control word	0~4294967295		
	P10.11	Set value	-65535.0~65535.0		
	P10.15	Current state	0~4294967295		
	P10.16	Fault state word 1	0~4294967295		
	P10.17	Fault state word 2	0~4294967295		
	P10.18	Alarm state word	0~4294967295		
	P10.20	Output frequency absolute value	0.0~65535.0	Hz	
	P10.21	Output frequency	-65535.0~65535.0	Hz	
	P10.22	Output current	0.00~65535.00	A	
	P10.23	Output voltage	0.0~65535.0	V	
	P10.24	Output torque	0.000~65535.000	N·m	
	P10.25	DC voltage	0.0~65535.0	V	
	P10.26	Inverter temperature	0~65535	℃	
	P10.27	Inverter hot load	0~65535	%	

Classify	Parameter number	Function	Setting range	Unit	Factory Value
10: System status	P10.28	Motor hot load	0~65535	%	
	P10.30	power	0.000~65535.000	kW	
	P10.31	Energy consumption	0.000~4294967.295	kW*h	
	P10.40	Hours of power on	0.000~4294967.295	h	
	P10.41	Number of power-on	0~4294967295		
	P10.44	Communication timeout	0.000~9999.000	s	
	P10.60	Current alarm number	0~4294967295		
	P10.61	Current fault number	0~4294967295		
	P10.62	Last fault number	0~4294967295		
	P10.63	The first two fault numbers	0~4294967295		
	P10.70	S input terminal state	0~4294967295		
	P10.71	AI1 terminal input value	-65535.000~65535.000	%	
	P10.72	AI2 terminal input value	-65535.000~65535.000	%	
	P10.74	Y terminal output state	0~4294967295		
	P10.75	AO1 terminal output value	-65535.000~65535.000	%	
	P10.76	AO2 terminal output value	-65535.000~65535.000	%	
	P10.78	Pulse input frequency	0.000~10000.000	kHz	
	P10.79	Pulse output frequency	0.000~10000.000	kHz	
	P10.80	Encoder count	0~4294967295		
	P10.81	Encoder speed	-9999.000~9999.000	Hz	
	P10.82	Encoder angle	0.0~359.9	deg	
	P10.90	Set value 1	-999999.000~999999.000	%	
	P10.91	Set value 2	-999999.000~999999.000	%	
	P10.92	Set value 3	-999999.000~999999.000	%	
	P10.98	Display value 1	-99999.000~99999.000		
	P10.99	Display value 2	-99999.000~99999.000		
11: Fault record	P11.10	Current fault output frequency	-999999.0~999999.0	Hz	0.0
	P11.11	Curerent fault output current	-999999.00~999999.00	A	0.00
	P11.12	Current fault bus voltage	-999999.0~999999.0	V	0.0
	P11.13	Current faulty inverter temperature	-999999~999999	℃	0
	P11.14	Current fault S terminal state	-999999~999999		0
	P11.15	Current fault Y terminal state	-999999~999999		0
	P11.16	Accumulated power-on time	0.000~4294967.295	h	0.000
	P11.20	Output frequency of last fault	-999999.0~999999.0	Hz	0.0
	P11.21	output current of last fault	-999999.00~999999.00	A	0.00
	P11.22	Bus voltage of last fault	-999999.0~999999.0	V	0.0
	P11.23	Inverter temperature of last fault	-999999~999999	℃	0
	P11.24	S-terminal state of last fault	-999999~999999		0
	P11.25	Y terminal state of last fault	-999999~999999		0

Classify	Parameter number	Function	Setting range	Unit	Factory Value
11: Fault record	P11.26	Accumulated power-on time of the last fault	0.000~4294967.295	h	0.000
	P11.30	Output frequency of the first two faults	-999999.0~999999.0	Hz	0.0
	P11.31	Output current of the first two faults	-999999.00~999999.00	A	0.00
	P11.32	Bus voltage of the first two faults	-999999.0~999999.0	V	0.0
	P11.33	Inverter temperature of the first two faults	-999999~999999	℃	0
	P11.34	S terminal state of the first two faults	-999999~999999		0
	P11.35	Y terminal state of th first two faults	-999999~999999		0
	P11.36	Accumulated power-on time of the first two faults	0.000~4294967.295	h	0.000
12: Free parameter	P12.00 ~ P12.19	Free parameter 1~ Free parameter 20	-999999.000~999999.000		0.000
	P12.90 ~ P12.99	Free parameter 91~ Free parameter 100	-999999.000~999999.000		0.000
13: Function output	P13.00	Comparator output	0~4294967295		0
	P13.01	Logic output	0~4294967295		0
	P13.02	Linear transformation 1 result	-999999.000~999999.000		0.000
	P13.03	Linear transformation 2 result	-999999.000~999999.000		0.000
	P13.10	Single arithmetic operation 1 output	-999999.000~999999.000		0.000
	P13.11	Single arithmetic operation 2 output	-999999.000~999999.000		0.000
	P13.12	Single arithmetic operation 3 output	-999999.000~999999.000		0.000
	P13.13	Single arithmetic operation 4 output	-999999.000~999999.000		0.000
	P13.14	Single arithmetic operation 5 output	-999999.000~999999.000		0.000
	P13.15	Math operation 1 output	-999999.000~999999.000		0.000
	P13.16	Math operation 2 output	-999999.000~999999.000		0.000
	P13.17	Math operation 3 output	-999999.000~999999.000		0.000
	P13.18	Math operation 4 output	-999999.000~999999.000		0.000
	P13.40	Comparator 1 output	0~1		0
	P13.41	Comparator 2 output	0~1		0
	P13.42	Comparator 3 output	0~1		0
	P13.43	Comparator 4 output	0~1		0
	P13.44	Comparator 5 output	0~1		0
	P13.45	Comparator 6 output	0~1		0
	P13.46	Comparator 7 output	0~1		0
	P13.47	Comparator 8 output	0~1		0
	P13.48	Comparator 9 output	0~1		0
	P13.50	Logic 1 output	0~1		0
	P13.51	Logic 2 output	0~1		0

Classify	Parameter number	Function	Setting range	Unit	Factory Value
13: Function output	P13.60	Timer 1 current counting	0~4294967295		0
	P13.61	Timer 1 current value	0~65535		0
	P13.62	Timer 1 current stage	0~16		0
	P13.63	Timer 2 current counting	0~4294967295		0
	P13.64	Timer 2 current value	0~65535		0
	P13.65	Timer 2 current stage	0~16		0
	P13.92	virtual address current value 1	0~4294967295		0
	P13.93	virtual address current value 2	0~4294967295		0
	P13.94	virtual address current value 3	0~4294967295		0
	P13.95	virtual address current value 4	0~4294967295		0
	P13.96	virtual address current value 5	0~4294967295		0
	P13.97	virtual address current value 6	0~4294967295		0
	P13.98	virtual address current value 7	0~4294967295		0
14: encoder	P14.01	Encoder 1 resolution	1~2147483647		1024
	P14.02	Encoder 1 direction	0: Forward; 1 : Reverse		0
16: logic unit	P16.00	Comparator 1 input parameter selection	0~65535		0
	P16.01	Comparator 1 comparison parameter selection	0~65535		0
	P16.02	Comparator 1 configuration	0: >; 1: <; 2: ≥; 3: ≤; 4: =; 5: ≈; 6: ≠		0
	P16.03	Comparator 1 delay time	0.000~99999.000	s	0.000
	P16.04	Comparator 2 input parameter selection	0~65535		0
	P16.05	Comparator 2 comparison parameter selection	0~65535		0
	P16.06	Comparator 2 configuration	0: >; 1: <; 2: ≥; 3: ≤; 4: =; 5: ≈; 6: ≠		0
	P16.07	Comparator 2 delay time	0.000~99999.000	s	0.000
	P16.08	Comparator 3 input parameter selection	0~65535		0
	P16.09	Comparator 3 comparison parameter selection	0~65535		0
	P16.10	Comparator 3 configuration	0: >; 1: <; 2: ≥; 3: ≤; 4: =; 5: ≈; 6: ≠		0
	P16.11	Comparator 3 delay time	0.000~99999.000	s	0.000

Classify	Parameter number	Function	Setting range	Unit	Factory Value
16: logic unit	P16.12	Comparator 4 input parameter selection	0~65535		0
	P16.13	Comparator 4 comparison parameter selection	0~65535		0
	P16.14	Comparator 4 configuration	0: >; 1: <; 2: ≥; 3: ≤; 4: =; 5: ≈; 6: ≠		0
	P16.15	Comparator 4 delay time	0.000~99999.000	s	0.000
	P16.16	Comparator 5 input parameter selection	0~65535		0
	P16.17	Comparator 5 comparison parameter selection	0~65535		0
	P16.18	Comparator 5 configuration	0: >; 1: <; 2: ≥; 3: ≤; 4: =; 5: ≈; 6: ≠		0
	P16.19	Comparator 5 delay time	0.000~99999.000	s	0.000
	P16.20	Comparator 6 input parameter selection	0~65535		0
	P16.21	Comparator 6 comparison parameter selection	0~65535		0
	P16.22	Comparator 6 configuration	0: >; 1: <; 2: ≥; 3: ≤; 4: =; 5: ≈; 6: ≠		0
	P16.23	Comparator 6 delay time	0.000~99999.000	s	0.000
	P16.24	Comparator 7 input parameter selection	0~65535		0
	P16.25	Comparator 7 comparison parameter selection	0~65535		0
	P16.26	Comparator 7 configuration	0: >; 1: <; 2: ≥; 3: ≤; 4: =; 5: ≈; 6: ≠		0
	P16.27	Comparator 7 delay time	0.000~99999.000	s	0.000
	P16.28	Comparator 8 input parameter selection	0~65535		0
	P16.29	Comparator 8 comparison parameter selection	0~65535		0
	P16.30	Comparator 8 configuration	0: >; 1: <; 2: ≥; 3: ≤; 4: =; 5: ≈; 6: ≠		0
	P16.31	Comparator 8 delay time	0.000~99999.000	s	0.000

Classify	Parameter number	Function	Setting range	Unit	Factory Value
16: logic unit	P16.32	Comparator 9 input parameter selection	0~65535		0
	P16.33	Comparator 9 comparison parameter selection	0~65535		0
	P16.34	Comparator 9 configuration	0: >; 1: <; 2: ≥; 3: ≤; 4: =; 5: ≈; 6: ≠		0
	P16.35	Comparator 9 delay time	0.000~99999.000	s	0.000
	P16.36	Logic unit 1 parameter selection 1	0~65535		0
	P16.37	Logic unit 1 input bit selection 1	0~32		0
	P16.38	Logic unit 1 parameter selection 2	0~65535		0
	P16.39	Logic unit 1 input bit selection 2	0~32		0
	P16.40	Logic unit 1 parameter selection 3	0~65535		0
	P16.41	Logic unit 1 input bit selection 3	0~32		0
	P16.42	Logical unit 1 configuration 1	0: No effect; 1: And; 2: OR; 3: NAND; 4: NOR; 5: XOR		0
	P16.43	Logical unit 1 configuration 2	0: No effect; 1: And; 2: OR; 3: NAND; 4: NOR; 5: XOR		0
	P16.44	Logic unit 2 parameter selection 1	0~65535		0
	P16.45	Logic unit 2 input bit selection 1	0~32		0
	P16.46	Logic unit 2 parameter selection 2	0~65535		0
	P16.47	Logic unit 2 input bit selection 2	0~32		0
	P16.48	Logic unit 2 parameter selection 3	0~65535		0
	P16.49	Logic unit 2 input bit selection 3	0~32		0
	P16.50	Logical unit 2 configuration 1	0: No effect; 1: And; 2: OR; 3: NAND; 4: NOR; 5: XOR		0
	P16.51	Logical unit 2 configuration 2	0: No effect; 1: And; 2: OR; 3: NAND; 4: NOR; 5: XOR		0

Classify	Parameter number	Function	Setting range	Unit	Factory Value
16: logic unit	P16.76	Selector 1 parameter source	0~65535		0
	P16.77	Selector 1 setting	0~16:numerical setting; 200~65535: address		0
	P16.78	Selector 1 destination parameters	0~65535		0
	P16.79	Selector 2 parameter source	0~65535		0
	P16.80	Selector 2 setting	0~16:numerical setting; 200~65535: address		0
	P16.81	Selector 2 destination parameters	0~65535		0
	P16.82	Selector 3 parameter source	0~65535		0
	P16.83	Selector 3 setting	0~16:numerical setting; 200~65535: address		0
	P16.84	Selector 3 destination parameters	0~65535		0
	P16.85	Selector 4 parameter source	0~65535		0
	P16.86	Selector 4 setting	0~16:numerical setting; 200~65535: address		0
	P16.87	Selector 4 destination parameters	0~65535		0
	P16.88	Selector 5 parameter source	0~65535		0
	P16.89	Selector 5 setting	0~16:numerical setting; 200~65535: address		0
	P16.90	Selector 5 destination parameters	0~65535		0
	P16.91	Selector 6 parameter source	0~65535		0
	P16.92	Selector 6 setting	0~16:numerical setting; 200~65535: address		0
	P16.93	Selector 6 destination parameters	0~65535		0
	P16.94	Selector 7 parameter source	0~65535		0
	P16.95	Selector 7 setting	0~16:numerical setting; 200~65535: address		0
	P16.96	Selector 7 destination parameters	0~65535		0
	P17.97	Selector 8 parameter source	0~65535		0
	P16.98	Selector 8 setting	0~16:numerical setting; 200~65535: address		0
	P16.99	Selector 8 destination parameters	0~65535		0
17: Mathematical operations	P17.00	Linear transformation 1 parameter source	0~65535		0
	P17.01	Linear transformation 1 X1	-999999.000~999999.000		0.000
	P17.02	Linear transformation 1 X2	-999999.000~999999.000		50.000
	P17.03	Linear transformation 1 Y1	-999999.000~999999.000		0.000
	P17.04	Linear transformation 1 Y2	-999999.000~999999.000		1500.000
	P17.05	Linear transformation 2 parameter source	0~65535		0

Classify	Parameter number	Function	Setting range	Unit	Factory Value
17: Mathematical operations	P17.06	Linear transformation 2 X1	-999999.000~999999.000		0.000
	P17.07	Linear transformation 2 X2	-999999.000~999999.000		0.000
	P17.08	Linear transformation 2 Y1	-999999.000~999999.000		0.000
	P17.09	Linear transformation 2 Y2	-999999.000~999999.000		0.000
	P17.16	Single arithmetic operation 1 parameter source	0~65535		0
	P17.17	Single arithmetic operation 1 operation setting	0: ABS; 1: Sqrt; 2: Sin; 3: Cos; 4: Power2; 5: Power3; 6: Random; 7: Bitwise NOT; 8: 2 to the n; 10: If less than 0, it means 0. If greater than 0, unchange; 11: If greater than 0, it means 0. If less than 0, unchange		0
	P17.18	Single arithmetic operation 2 parameter source	0~65535		0
	P17.19	Single arithmetic operation 2 operation setting	0: ABS; 1: Sqrt; 2: Sin; 3: Cos; 4: Power2; 5: Power3; 6: Random; 7: Bitwise NOT; 8: 2 to the n; 10: If less than 0, it means 0. If greater than 0, unchange; 11: If greater than 0, it means 0. If less than 0, unchange		0
	P17.20	Single arithmetic operation 3 parameter source	0~65535		0
	P17.21	Single arithmetic operation 3 operation setting	0: ABS; 1: Sqrt; 2: Sin; 3: Cos; 4: Power2; 5: Power3; 6: Random; 7: Bitwise NOT; 8: 2 to the n; 10: If less than 0, it means 0. If greater than 0, unchange; 11: If greater than 0, it means 0. If less than 0, unchange		0
	P17.22	Single arithmetic operation 4 parameter source	0~65535		0
	P17.23	Single arithmetic operation 4 operation setting	0: ABS; 1: Sqrt; 2: Sin; 3: Cos; 4: Power2; 5: Power3; 6: Random; 7: Bitwise NOT; 8: 2 to the n; 10: If less than 0, it means 0. If greater than 0, unchange; 11: If greater than 0, it means 0. If less than 0, unchange		0

Classify	Parameter number	Function	Setting range	Unit	Factory Value
17: Mathematical operations	P17.24	Single arithmetic operation 5 parameter source	0~65535		0
	P17.25	Single arithmetic operation 5 operation setting	0: ABS; 1: Sqrt; 2: Sin; 3: Cos; 4: Power2; 5: Power3; 6: Random; 7: Bitwise NOT; 8: 2 to the n; 10: If less than 0, it means 0. If greater than 0, unchange; 11: If greater than 0, it means 0. If less than 0, unchange		0
	P17.26	Mathematical operation 1 parameter source 1	0~65535		0
	P17.27	Mathematical operation 1 parameter source 2	0~65535		0
	P17.28	Mathematical operation 1 parameter source 3	0~65535		0
	P17.29	Math operation 1 operation setting 1	0:No effect; 1:+; 2:-; 3:*; 4:/; 5:Max; 6:Min; 7:Mean; 9:Bitwise AND; 10:Bitwise OR; 11:ANDN; 15:Edge signal source; 16:Rearrange the values and increase 8 bits		0
	P17.30	Math operation 1 operation setting 2	0:No effect; 1:+; 2:-; 3:*; 4:/; 5:Max; 6:Min; 7:Mean; 9:Bitwise AND; 10:Bitwise OR; 11:ANDN; 15:Edge signal reset; 16:Rearrange the values and decrease 8 bits		0
	P17.31	Mathematical operation 2 parameter source 1	0~65535		0
	P17.32	Mathematical operation 2 parameter source 2	0~65535		0
	P17.33	Mathematical operation 2 parameter source 3	0~65535		0

Classify	Parameter number	Function	Setting range	Unit	Factory Value
17: Mathematical operations	P17.34	Math operation 2 operation setting 1	0:No effect; 1:+; 2:-; 3:*; 4:/; 5:Max; 6:Min; 7:Mean; 9:Bitwise AND; 10:Bitwise OR; 11:ANDN; 15:Edge signal source; 16:Rearrange the values and increase 8 bits		0
	P17.35	Math operation 2 operation setting 2	0:No effect; 1:+; 2:-; 3:*; 4:/; 5:Max; 6:Min; 7:Mean; 9:Bitwise AND; 10:Bitwise OR; 11:ANDN; 15:Edge signal reset; 16:Rearrange the values and decrease 8 bits		0
	P17.36	Mathematical operation 3 parameter source 1	0~65535		0
	P17.37	Mathematical operation 3 parameter source 2	0~65535		0
	P17.38	Mathematical operation 3 parameter source 3	0~65535		0
	P17.39	Math operation 3 operation setting 1	0:No effect; 1:+; 2:-; 3:*; 4:/; 5:Max; 6:Min; 7:Mean; 9:Bitwise AND; 10:Bitwise OR; 11:ANDN; 15:Edge signal source; 16:Rearrange the values and increase 8 bits		0
	P17.40	Math operation 3 operation setting 2	0:No effect; 1:+; 2:-; 3:*; 4:/; 5:Max; 6:Min; 7:Mean; 9:Bitwise AND; 10:Bitwise OR; 11:ANDN; 15:Edge signal reset; 16:Rearrange the values and decrease 8 bits		0
	P17.41	Mathematical operation 4 parameter source 1	0~65535		0
	P17.42	Mathematical operation 4 parameter source 2	0~65535		0
	P17.43	Mathematical operation 4 parameter source 3	0~65535		0

Classify	Parameter number	Function	Setting range	Unit	Factory Value
17: Mathematical operations	P17.44	Math operation 4 operation setting 1	0:No effect; 1:+; 2:-; 3:*; 4:/; 5:Max; 6:Min; 7:Mean; 9:Bitwise AND; 10:Bitwise OR; 11:ANDN; 15:Edge signal source; 16:Rearrange the values and increase 8 bits		0
	P17.45	Math operation 4 operation setting 2	0:No effect; 1:+; 2:-; 3:*; 4:/; 5:Max; 6:Min; 7:Mean; 9:Bitwise AND; 10:Bitwise OR; 11:ANDN; 15:Edge signal reset; 16:Rearrange the values and decrease 8 bits		0
18: Timing control	P18.00	Timer 1 clock source	0:1ms; 1:10ms; 2:100ms; 3:1s; 6:1h; 7:1day; 11~26: from S1 ~ S16, when S terminal is the rising edge, count plus 1; 27~42: from the 0~15 bits of virtual terminal P01.30, when the corresponding bit is the rising edge, count plus 1; 51~76: from S1~S16, when S terminal is the falling edge, count plus 1; 77~92: from the 0~15 bits of virtual terminal P01.30, when the corresponding bit is the falling edge, count plus 1; 200~3799: address		0
	P18.01	Timer 1 working mode	0: Stop at the end of a single run; 1 ~ 16: Set the start of the next cycle At the end of a single operation, the cycle starts automatically from the setting		0
	P18.02	Timer 1 control command	bit0: Enable; bit1: Start counting; bit2: Pause counting; bit3: Clear the counting		0
	P18.03	Timer 1 set value	-1~4294967295		-1
	P18.04	Timer 1 phase 1 time	0~4294967295		0
	P18.05	Timer 1 phase 2 time	0~4294967295		0
	P18.06	Timer 1 phase 3 time	0~4294967295		0
	P18.07	Timer 1 phase 4 time	0~4294967295		0
	P18.08	Timer 1 phase 5 time	0~4294967295		0
	P18.09	Timer 1 phase 6 time	0~4294967295		0
	P18.10	Timer 1 phase 7 time	0~4294967295		0
	P18.11	Timer 1 phase 8 time	0~4294967295		0

Classify	Parameter number	Function	Setting range	Unit	Factory Value
18: Timing control	P18.12	Timer 1 phase 9 time	0~4294967295		0
	P18.13	Timer 1 phase 10 time	0~4294967295		0
	P18.14	Timer 1 phase 11 time	0~4294967295		0
	P18.15	Timer 1 phase 12 time	0~4294967295		0
	P18.16	Timer 1 phase 13 time	0~4294967295		0
	P18.17	Timer 1 phase 14 time	0~4294967295		0
	P18.18	Timer 1 phase 15 time	0~4294967295		0
	P18.19	Timer 1 phase 16 time	0~4294967295		0
	P18.20	Timer 2 clock source	0:1ms; 1:10ms; 2:100ms; 3:1s; 6:1h; 7:1day; 11~26: from S1 ~ S16, when S terminal is the rising edge, count plus 1; 27~42: from the 0~15 bits of virtual terminal P01.30, when the corresponding bit is the rising edge, count plus 1; 51~76: from S1~S16, when S terminal is the falling edge, count plus 1; 77~92: from the 0~15 bits of virtual terminal P01.30, when the corresponding bit is the falling edge, count plus 1; 200~3799: address		0
	P18.21	Timer 2 working mode	0: Stop at the end of a single run; 1 ~ 16: Set the start of the next cycle At the end of a single operation, the cycle starts automatically from the setting		0
	P18.22	Timer 2 control command	bit0: Enable; bit1: Start counting; bit2: Pause counting; bit3: Clear counting		0
	P18.23	Timer 2 set value	-1~4294967295		-1
	P18.24	Timer 2 phase 1 time	0~4294967295		0
	P18.25	Timer 2 phase 2 time	0~4294967295		0
	P18.26	Timer 2 phase 3 time	0~4294967295		0
	P18.27	Timer 2 phase 4 time	0~4294967295		0
	P18.28	Timer 2 phase 5 time	0~4294967295		0
	P18.29	Timer 2 phase 6 time	0~4294967295		0
	P18.30	Timer 2 phase 7 time	0~4294967295		0
	P18.31	Timer 2 phase 8 time	0~4294967295		0
	P18.32	Timer 2 phase 9 time	0~4294967295		0
	P18.33	Timer 2 phase 10 time	0~4294967295		0
	P18.34	Timer 2 phase 11 time	0~4294967295		0
	P18.35	Timer 2 phase 12 time	0~4294967295		0
	P18.36	Timer 2 phase 13 time	0~4294967295		0
	P18.37	Timer 2 phase 14 time	0~4294967295		0
	P18.38	Timer 2 phase 15 time	0~4294967295		0
	P18.39	Timer 2 phase 16 time	0~4294967295		0

6.1 Group 01 parameters: system configuration

Parameter number	Function	Setting range	Unit	Factory Value
P01.11	Parameter operation	0: Normal Operation; 1: Parameter Initialization, initialization parameters other than P01.XX; 2: Initialize all parameters		0
P01.13	Set keyword	0~9999		0
P01.14	Set keyword confirmed	0~9999		0
P01.15	Input keyword	0~9999		0

■ Function:Parameter operation setting

➢ Principle explanation:
Set P01.13 and P01.14 to the same non-zero number, and the set password is valid.

Parameter number	Function	Setting range	Unit	Factory Value
P01.19	Page of parameter	0~4		0

■ Function: customize macro with upper computer

➢ Defining rules:
Modify P01.19 to complete page turning firstly
{parameter no. (even numbers), 4294967210}
{next parameter no. , 11(Application macro code to be set) ,
{next parameter no. , 300(parameter no. To be modified P03.00)}
{next parameter no. , 3(setting value of P03.00)}

{parameter no. (even numbers), 4294967125} end

Parameter number	Function	Setting range	Unit	Factory Value
P01.20	Macro-program	0~9999		0
P01.21	Recipe	0~10000		0

■ Function: choose application macro, formula

➢ Principle explanation:
Application macro is a group of parameter Activating the corresponding application macro is same to setting the macro parameter set.
Set P01.20 to select the corresponding macro, you can select 2 macros at the same time. Each two-digit number represents a macro, thousand bit and hundred bit form a macro, and ten bit and unit form another macro. When the corresponding macro setting value of P01.20 changes, the corresponding macro configuration action is applied, and any parameters can be manually modified after the configuration is completed. For specific macro information, please refer to the application macro detailed description.A formula is a set of parameter sets, and the corresponding formula configuration action is executed every time the power is turned on and switched.

Parameter number	Function	Setting range	Unit	Factory Value
P01.30	Set virtual terminal	0~199:Value setting; 200~9999:Address		0

■ Function:set virtual terminal value

➢ Principle explanation:
The virtual terminal is used as a function extension. When set to 0 ~ 199, this value is the set value; when set to 200 ~ 9999, this setting is the address. The address is the selected parameter number, and the actual value is determined by the current value of the selected parameter number. For usage details, please refer to P03.00 ~ P03.09.

Parameter number	Function	Setting range	Unit	Factory Value
P01.32	Virtual address 1	0~4294967295		0
P01.33	Virtual address 2	0~4294967295		0
P01.34	Virtual address 3	0~4294967295		0
P01.35	Virtual address 4	0~4294967295		0
P01.36	Virtual address 5	0~4294967295		0
P01.37	Virtual address 6	0~4294967295		0
P01.38	Virtual address 7	0~4294967295		0

■ Function: set virtual communication terminal address

➢ Principle explanation:
Virtual communication address is used as function expansion. When the 16 bit communication data other than the parameter number is sent or received through the upper computer, this value is the actual address of the upper computer (the upper computer address is converted to decimal, plus 1), and the corresponding value of the virtual address refers to P13.92 ~ P13.98.

➢ For example:using BD600 inverter communication address as the upper computer to control the start, stop, setting frequency and read output frequency of H1 inverter.

BD600 communication address and data

Communication address	Communication data
1000H	Control command, 0001H: forward operation; 0006H: deceleration stop
3000H	Setting frequency (0~10000 correspondence to 0~max. frequency)
3001H	Read output frequency

H1 parameter setting

Parameter number	Function	Set Value
P01.32	Virtual address 1	4097
P01.33	Virtual address 2	12289
P01.34	Virtual address 3	12290
P02.10	Set value source 1	5
P03.00	Start command source	2
P12.00	Free parameter 1	100.000
P12.02	Free parameter 3	1.000
P12.06	Free parameter 7	16.000
P12.07	Free parameter 8	100.000
P16.76	Selector 1 parameter source	1201
P16.77	Selector 1 setting	1392
P16.78	Selector 1 destination parameters	291
P16.79	Selector 2 parameter source	1315
P16.80	Selector 2 setting	0
P16.81	Selector 2 destination parameters	290
P16.82	Selector 3 parameter source	1316
P16.83	Selector 3 setting	0
P16.84	Selector 3 destination parameters	1394
P17.26	Mathematical operation 1 parameter source 1	1393
P17.27	Mathematical operation 1 parameter source 2	1200
P17.29	Math operation 1 operation setting 1	4
P17.31	Mathematical operation 2 parameter source 1	1020
P17.32	Mathematical operation 2 parameter source 2	127
P17.34	Math operation 2 operation setting 1	3

Parameter number	Function	Setting range	Unit	Factory Value
P01.39	Command Mode	0:Single Command source mode; 1:Multi-command source mode		0

■ Function:Select command mode

➢ Principle explanation:
The command mode determines the command source . The single-command source mode specifies one source with an index number, and the multi-command source mode can specify multiple sources in binary. For usage details, please refer to P03.00 ~ P03.09.

Parameter number	Function	Setting range	Unit	Factory Value
P01.40	Communication protocol	0:Reserved; 1:MODBUS RTU; 2~6:Reserved		1

■ Function:Select communication protocol (only supports MOUDBUS RTU)

Parameter number	Function	Setting range	Unit	Factory Value
P01.41	Address	0~247		1

■ Function:Set the local address of the inverter

Parameter number	Function	Setting range	Unit	Factory Value
P01.42	Baud rate	0: 2400; 1: 4800; 2: 9600; 3: 19200; 4: 38400; 5~10: Reserved	bps	3
P01.43	Parity check	0:No Check; 1:Even check; 2:Odd check		0
P01.44	Data bit	7~8	bits	8
P01.45	Stop bit	0.0~2.0	bit	1.0

■ Function:Functional port configuration

Parameter number	Function	Setting range	Unit	Factory Value
P01.46	Communication delay time	0~100	ms	3

■ Function:Set communication delay time, and suggest upper computer communication timeout setting range: 200ms-1000ms

Parameter number	Function	Setting range	Unit	Factory Value
P01.47	parameter decimal mode	0~123		0

■ Function:select command mode

➢ Principle explanation:
The parameter decimal point mode only affects communication, changes the parameter value during communication.

➢ P01.47's unit place are for the parameters of three decimal places:
0: the decimal place remains unchanged, 1: the decimal place becomes two,
2: the decimal place becomes one, 3: becomes no decimal place.

➢ The ten place of P01.47 are for the parameters of two decimal places:
0: the decimal place remains unchanged, 1: the decimal place becomes one,
2: becomes no decimal place.

➢ P01.47's hundred place are for one decimal place parameter:
0: decimal place remains unchanged, 1: becomes no decimal place.

➢ For example: P02.51=30.000s when P01.47=000 serial port read data=30000;
when P01.47=001 serial port read data=3000; when P01.47=002 serial port read data=300;
when P01.47=003 serial port reading data=30.

➢ For example: P06.44=43.66 when P01.47=000 serial port read data=4366;
when P01.47=010 serial port read data=436; when P01.47=020 serial port read data=43

Parameter number	Function	Setting range	Unit	Factory Value
P01.63	Keyboard settings source	0: Keyboard numeric setting (P02.92); 1: Keyboard potentiometer setting		1

■ Function:Set keyboard settings source

➢ Principle explanation:
Select the source of keyboard setting value, digital setting (P02.92) or keyboard potentiometer. When the keyboard potentiometer setting is selected, P02.92 will keep the current potentiometer setting data, then select the keyboard numeric setting, and set the frequency to the previous potentiometer setting data.

Parameter number	Function	Setting range	Unit	Factory Value
P01.66	keyboard M light source	0: Always 0; 1: Always 1; 2: Stopped; 3: Running; 4: Fault; 5: Warning; 6: Reversing; 7: Ready; 64: STO state; 100 ~ 9999: Address		5
P01.67	Keyboard M light source bit	0~31		0

■ Function: Select the signal source of the keyboard M light

➢ Principle explanation:
The set value of keyboard M light source is bigger or equal to 100 (address mode), the address is the selected parameter number, the actual value is determined by the current value of the selected parameter number. The bit position of the keyboard M light source is set bit selection. When the terminal source is address 100 ~ 9999, the bit setting is valid. The keyboard M light source setting value is less than 100 (non-address mode), and the keyboard M light source bit does not need to be set. The function description of the terminal source is as follows:

Setting value	Function	Description
0	Always 0	Keyboard M light off
1	Always 1	Keyboard M light on
2	Stopped	In the stopped state, the keyboard M light is on
3	Running	In the running state, the keyboard M light is on
4	Fault	In the fault state, the keyboard M light is on
5	Alarm	In the alarm state, the keyboard M light is on
6	Reversing	In the reversing state, the keyboard M light is on
7	Ready	In the ready state, the keyboard M light is on
64	STO status	In the STO state, the keyboard M light is on
100~9999	Address	Select the parameter as the output source of keyboard M light

Parameter number	Function	Setting range	Unit	Factory Value
P01.68	Display value 1 source	0~9999		1011
P01.69	Display value 2 source	0~9999		1091

■ Function: Set display value source

➢ Principle explanation:
Set the source of the display value, the source is the parameter number, and the value of the corresponding parameter number is put into P10.98 and P10.99 to be used as the corresponding monitoring display of the keyboard. See the keyboard description for details.
The keyboard display value 1 and display value 2 can be flexibly selected, and the factory value displays the set value and set value 2. If want to select other status data display, set P01.68 and P01.69 to the corresponding parameter number, for example: the keyboard displays acceleration time 0 and acceleration time 1, you need to set the parameters P01.68 = 250, P01.69 = 251, at this time, the data of the keyboard display value 1 is the acceleration time 0, and the data of the display value 2 is the acceleration time 1.

6.2 Group 02 parameters: setting channel

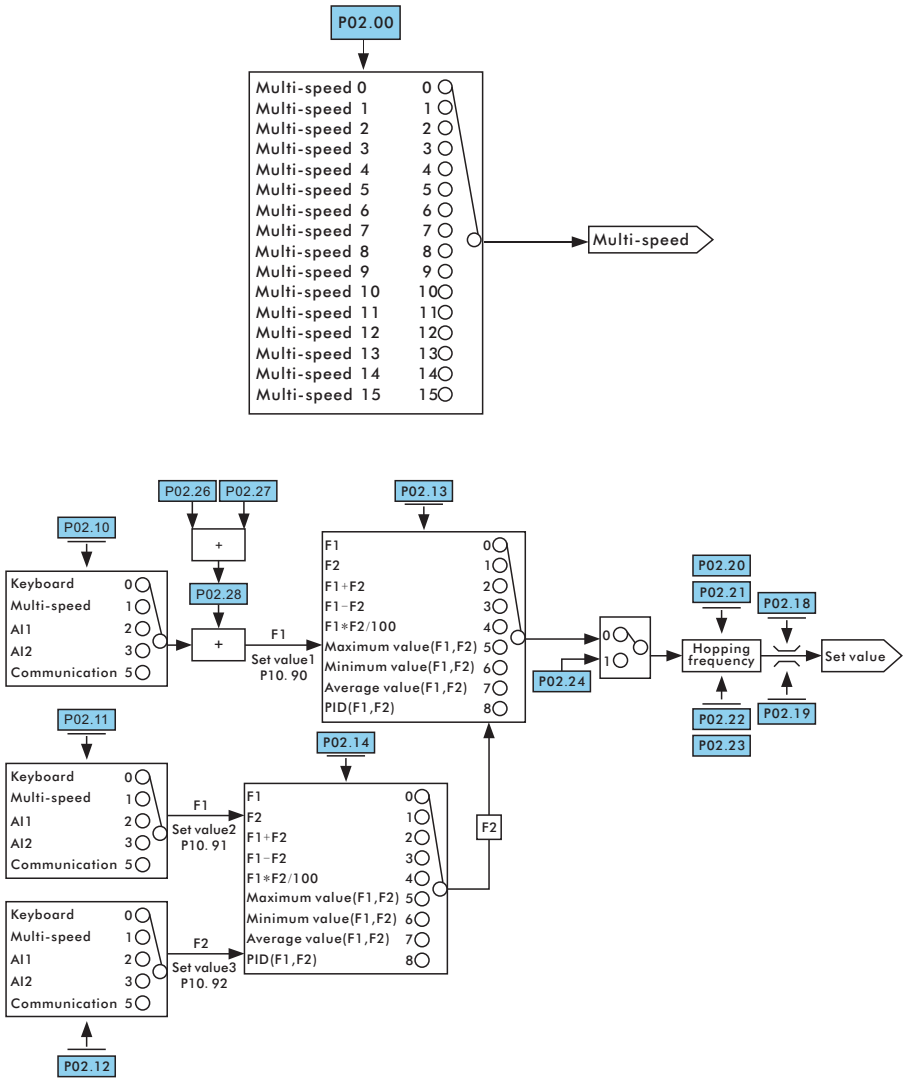

Figure 6-2-1 Set value source and channel setting

Parameter number	Function	Setting range	Unit	Factory Value
P02.00	Multi-speed source	0~11111111 Units: S1; Tens: S2; Hundreds: S3; . . .		0
P02.01	Source of acceleration time			0
P02.02	Source of deceleration time			0
P02.03	Source of incremental command (UP)	Units: Keyboard; Tens: Communication; Hundreds: S1; Thousands: S2; ...		0
P02.04	Source of decrement command (DOWN)			0

■ Function: Select command source

- ➢ P02.00: Multi-speed source, select the corresponding external terminal, see P02.30 ~ P02.45 for multispeed 0 ~ 15.
- ➢ P02.01: Source of acceleration time, select the corresponding external terminal. For acceleration time, please refer to P02.50 ~ P02.65.
- ➢ P02.02: source of deceleration time, select the corresponding external terminal, see P02.70 ~ P02.85 for deceleration time.
- ➢ P02.03: Source of incremental instruction (UP), select the corresponding source.
- ➢ P02.04: Decrease instruction (DOWN) source, select the corresponding source. See P02.26 ~ P02.28 for UP / DOWN parameters.
- ➢ Example: Select S2, S3, S4 as effective external terminals to control 8-stage speed:
  Step 1: Select S2, S3, S4 as multi-speed terminals, P02.00 is set to 1110;
  Step 2: Control S2, S3, S4 to switch multi-speed, the corresponding relationship between 8 multi-speed is as follows:

S4	S3	S2	Effective multi-speed
0	0	0	Multi-speed 0
0	0	1	Multi-speed 1
0	1	0	Multi-speed 2
0	1	1	Multi-speed 3
1	0	0	Multi-speed 4
1	0	1	Multi-speed 5
1	1	0	Multi-speed 6
1	1	1	Multi-speed 7

Parameter number	Function	Setting range	Unit	Factory Value
P02.10	Set value source 1	0: Keyboard; 1: Multi-speed; 2: AI1; 3: AI2; 5: Communication; 9: Pulse input; 200 ~ 9999: Address		0
P02.11	Set value source 2			0
P02.12	Set value source 3			0

■ Function: Select the source of the set value

- ➢ See P01.63 for keyboard setting value
- ➢ The communication setting value is written into P02.90 through communication.
- ➢ When the setting is 200 ~ 9999, this setting is the address. The address is the selected parameter number, and the actual value is determined by the current value of the selected parameter number.

Parameter number	Function	Setting range	Unit	Factory Value
P02.13	Set channel 1 relationship selection	0:F1; 1:F2; 2:F1+F2; 3:F1-F2; 4:F1*F2/100; 5:Maximum value(F1,F2); 6:Minimum value(F1,F2) ; 7:Average value(F1,F2) ; 8:PID(F1,F2)		0
P02.14	Set channel 2 relationship selection			0

■ Function: Select to set the channel relationship

- ➢ Principle explanation:
  In the setting channel relationship, set 0 to select the F1 channel set value; Set 1 to select the F2 channel set value; Set 2 to select the sum of the F1 and F2 channel set values; Set 3 to select the difference between the F1 and F2 channel set values ; Set 4 to select the product of F1 and F2 channel set value divided by 100; Set 5 to select the maximum value in F1 and F2; Set 6 to select the minimum value in F1 and F2; Set 7 to select the average value of F1 and F2; Set 8 to select PID Control (F1 is set, F2 is feedback).

Parameter number	Function	Setting range	Unit	Factory Value
P02.18	Maximum setting value	0.000~99999.000		50.000
P02.19	Minimum setting value			0.000

■ Function: limit the set value range

- ➢ Principle explanation:
  Limit the setting range to [P02.19, P02.18]. When each setting source is in units of %, the maximum setting value (P02.18) represents 100%, which is based on the maximum setting value. The output frequency is less than or equal to P05.08 motor frequency upper limit.

Parameter number	Function	Setting range	Unit	Factory Value
P02.20	Avoid-frequency 1 start point	-1000.000~1000.000	%	0.000
P02.21	Avoid-frequency 1 stop point			
P02.22	Avoid-frequency 2 start point			
P02.23	Avoid-frequency 2 stop point			

■ Function: Set the avoidance frequency

- ➢ Principle explanation:
  The set frequency of the inverter is given in a skipped manner in the avoidance frequency range in the manner of Figure 6-2-2.

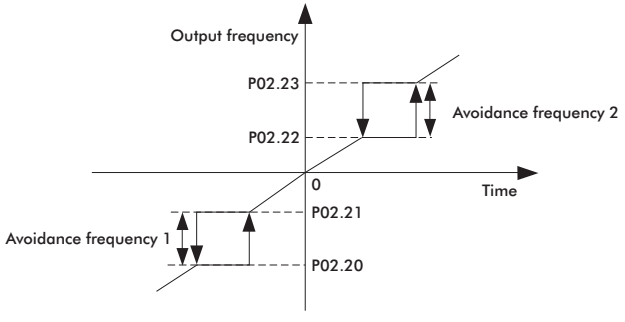

Figure 6-2-2 Avoidance frequency

Parameter number	Function	Setting range	Unit	Factory Value
P02.24	Jog Frequency	-1000.000~1000.000	%	10.000

■ Function: Set the Jog frequency as a percentage of the maximum set value of P02.18. Jog command see P03.03

Parameter number	Function	Setting range	Unit	Factory Value
P02.26	Increase and decrease (UP / DOWN) Step-frequency	-100.0~100.0	%	0.2
P02.27	Increase and decrease (UP / DOWN) memory selection	0: No memory; 1: Only power down memory; 2: Only stop memory; 3: Both power down and stop memory		3
P02.28	Speed up and down frequency	-1000.000~1000.000	%	0.000

■ Function: Select UP / DOWN function

➢ Principle explanation:
When the signal is activated, the frequency setting of the inverter increases or decreases by one unit. When the switch is held, the frequency will rapidly increase upward or downward to a certain time, and then increase or decrease uniformly. See P02.03 ~ P02.04 for the selection of UP / DOWN signal. P02.28 is only used for clearing UP / DOWN results. The data has no intuitive meaning after standardization.

Parameter number	Function	Setting range	Unit	Factory Value
P02.30	Multi-speed 0	-1000.000~1000.000	%	0.000
P02.31	Multi-speed 1			
P02.32	Multi-speed 2			
P02.33	Multi-speed 3			
P02.34	Multi-speed 4			
P02.35	Multi-speed 5			
P02.36	Multi-speed 6			
P02.37	Multi-speed 7			
P02.38	Multi-speed 8			
P02.39	Multi-speed 9			
P02.40	Multi-speed 10			
P02.41	Multi-speed 11			
P02.42	Multi-speed 12			
P02.43	Multi-speed 13			
P02.44	Multi-speed 14			
P02.45	Multi-speed 15			

■ Function: Multi-stage speed setting

Parameter number	Function	Setting range	Unit	Factory Value
P02.50	Acceleration time 0	0.050~3600.000	s	*
P02.51	Acceleration time 1			
P02.52	Acceleration time 2			
P02.53	Acceleration time 3			
P02.54	Acceleration time 4			
P02.55	Acceleration time 5			
P02.56	Acceleration time 6			
P02.57	Acceleration time 7			
P02.58	Acceleration time 8			
P02.59	Acceleration time 9			
P02.60	Acceleration time 10			
P02.61	Acceleration time 11			
P02.62	Acceleration time 12			
P02.63	Acceleration time 13			
P02.64	Acceleration time 14			
P02.65	Acceleration time 15			

■ Function: acceleration time setting

➢ Principle explanation:
As shown in Figure 6-2-3, the acceleration time refers to the time required to accelerate from 0Hz to P06.13 motor frequency.

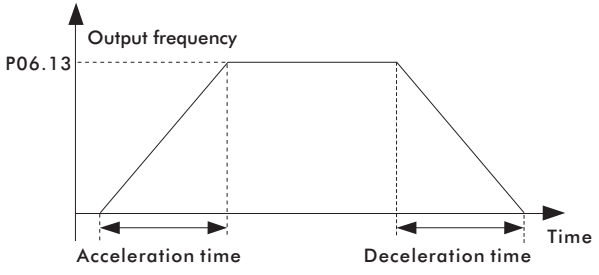

Figure 6-2-3 Acceleration and Deceleration

Parameter number	Function	Setting range	Unit	Factory Value
P02.66	JOG acceleration time	0.050~3600.000	s	5.000

■ Function: Set Jog acceleration time

Parameter number	Function	Setting range	Unit	Factory Value
P02.68	S curve acceleration time 1	0.000~100.000	%	0.000
P02.69	S curve acceleration time 2			

■ Function: Set S curve acceleration time

➢ Principle explanation:
S curve is used in places requiring gentle start or stop, such as elevators, conveyor belts, etc.
Note: When P02.68 and P02.89 are not 0, S curve acceleration and deceleration are effective.

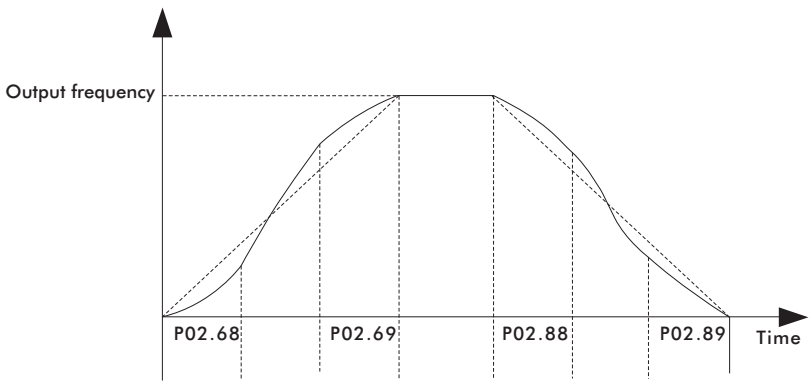

Figure 6-2-4 S curve acceleration and deceleration

Parameter number	Function	Setting range	Unit	Factory Value
P02.70	Deceleration time 0	0.050~3600.000	s	*
P02.71	Deceleration time 1			
P02.72	Deceleration time 2			
P02.73	Deceleration time 3			
P02.74	Deceleration time 4			
P02.75	Deceleration time 5			
P02.76	Deceleration time 6			
P02.77	Deceleration time 7			
P02.78	Deceleration time 8			
P02.79	Deceleration time 9			
P02.80	Deceleration time 10			
P02.81	Deceleration time 11			
P02.82	Deceleration time 12			
P02.83	Deceleration time 13			
P02.84	Deceleration time 14			
P02.85	Deceleration time 15			

■ Function: Set deceleration time

➢ Principle explanation:
As shown in Figure 6-2-3, the deceleration time refers to the time required to decelerate from P06.13 motor frequency to 0Hz.

Parameter number	Function	Setting range	Unit	Factory Value
P02.86	Jog Deceleration time	0.050~3600.000	s	5.000
P02.87	Safe deceleration time	0.050~3600.000	s	5.000

■ Function: Set Jog deceleration time and safe deceleration time (Jog command see P03.03, safe stop command see P03.06)

Parameter number	Function	Setting range	Unit	Factory Value
P02.88	S curve deceleration time 1	0.000~100.000	%	0.000
P02.89	S curve deceleration time 2			

■ Function: Set S curve deceleration time (see P02.68, P02.69)

Parameter number	Function	Setting range	Unit	Factory Value
P02.90	Communication set value	-1000.000~1000.000	%	0.000
P02.91	Communication command	0~4294967295		0
P02.92	Keyboard set value	-1000.000~1000.000	%	100.000
P02.93	Keyboard command	0~4294967295		0

■ Function: port between control command and set value, no need to set under normal circumstances, can be used for viewing

Table 6-2-2 Command control word table

Command word (bit)	Definition
0	Start
1	Reverse
2	Start reverse
3	JOG
4	Stop
5	Emergency stop
6	Safe stop
7	Reset
9	Parameter self-learning
10	Tripping
11	Pause
13	UP (incremental)
14	DOWN (decreasing)

6.3 Group 03 parameters: input and output

Parameter number	Function	Setting range	Unit	Factory Value
P03.00	Start command source	0 ~ 4294967295 Single command source mode (P01.39 = 0): 0: No effect; 1: Keyboard; 2: communication; 3: S1; 4: S2 ... 17 ~ 32: The 0 ~ 15 bits of P01.30 Multi-command source mode (P01.39 = 1): bit0: Keyboard; bit1: Communication; bit2: S1; bit3: S2; ... bit16~bit31:The 0~15 bit of P01.30		1
P03.01	Reverse start command source			0
P03.02	Reverse command source			0
P03.03	JOG command source			1
P03.04	Stop command source			0
P03.05	Free parking command source			0
P03.06	Safe stop command source			0
P03.07	Reset command source			1
P03.08	Fault command source			0
P03.09	Pause command source			0

■ Function: Select the command source (when the corresponding command source is selected as the keyboard, the reverse command, Jog command, and free stop command are all derived from the custom key M)

- Reverse start command: set value is reversed, and send out start command.
- Reverse command: set value is reversed.
- Jog command: Jog function. The priority is greater than the start command and lower than the stop command.
- Safe stop: stop according to the safe deceleration time (P02.87). The priority is higher than the stop command and lower than the free stop command.
- Fault command: send out a fault signal and the inverter will stop freely.
- Pause command: The inverter stops freely, but the operating bit in the status word remains.
- Principle explanation:

P01.39 = 0 is single command source mode, P03.00 ~ P03.09 commands select a single source, index number 0: no effect; 1: keyboard; 2: communication,.... For example, when P03.00 = 3, he start command comes from S1. The operation of the host computer needs to select communication, and the single command function is effective.

P01.39 = 0 Single command source mode

Index No.	32~17	16	15	14	13	12	11	10	9	8	7	6	5	4	3	2	1	0
bits 0-15 of virtual terminal P01.30 |15|14|13|12|11|.....|5|4|3|2|1|0|		S14	S13	S12	S11	S10	S9	S8	S7	S6	S5	S4	S3	S2	S1	Communication	Keypad	No option

Figure 6-3-1 Single command source mode

P01.39 = 1 is multi-command source mode, P03.00 ~ P03.09 commands can select multiple sources, set bit selection bit0: keyboard, bit1: communication, ... For example, when P03.00 = 7 (binary 111), there are three ways to start the command source, which are keyboard, communication, and S1. The operation of the host computer needs to select communication, and the multi-command function is effective.

P01.39 = 1 Multi-command source mode

bit	31~16	15	14	13	12	11	10	9	8	7	6	5	4	3	2	1	0
bits 0-15 of virtual terminal P01.30 |15|14|13|12|11|.....|5|4|3|2|1|0|		S14	S13	S12	S11	S10	S9	S8	S7	S6	S5	S4	S3	S2	S1	Communication	Keypad

Figure 6-3-2 Multi-command source mode

Parameter number	Function	Setting range	Unit	Factory Value
P03.20	S1 type	One place: 0: Positive logic 1: Reverse logic 2: Rising edge 3: Falling edge Tens place: 1: Rising edge toggle 2: Falling edge toggle Hundreds place: 1: The edge signal is not cleared by other edge signals Thousands place: 1: The edge signal is not cleared by the stop signal		0
P03.21	S2 type			
P03.22	S3 type			
P03.23	S4 type			
P03.24	S5 type			
P03.25	S6 type			
P03.26	S7 type			
P03.27	S8 type			

■ Function: Set S curve acceleration time

- Principle explanation:

One place: 0: positive logic,High level is valid state, low level is invalid state;
1: Reverse logic,High level is invalid state, low level is valid state;
2: Rising edge, the rising edge is valid;
3: Falling edge, falling edge is valid.
Tens place: 1: Rising edge ping-pong key;
2: Toggle on the falling edge.
The tens position can control the edge signal and realize a reset button to control start and stop.
Hundreds place: 1: The edge signal is not cleared by other edge signals;
Thousands place: 1: The edge signal is not cleared by the stop signal.

- Two-wire mode 1:

This mode is the most commonly used two-wire mode with enable and direction in one.
The switch signals K1 and K2 determine the forward and reverse rotation of the motor.

Table 6-3-1

Parameter number	Set value	Note
P03.00	3	The source of the start command is S1
P03.01	4	The source of the reverse start command is S2
P03.20	0	S1 type is positive logic
P03.21	0	S2 type is positive logic

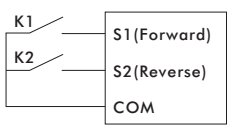

K1	K2	Operate command
OFF	OFF	Stop
OFF	ON	Reverse
ON	OFF	Forward
ON	ON	Stop

Chart 6-3-3

- Two-wire mode 2:

The enable is separated from the direction. In this mode, K1 is the running enable terminal, and the direction is determined by K2.

Table 6-3-2

Parameter number	Set value	Note
P03.00	3	The source of the start command is S1
P03.02	4	The source of the reverse command is S2
P03.20	0	S1 type is positive logic
P03.21	0	S2 type is positive logic

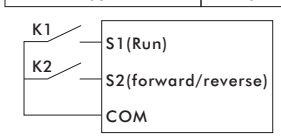

K1	K2	Operate command
OFF	OFF	Stop
OFF	ON	Stop
ON	OFF	Forward
ON	ON	Reverse

Chart 6-3-4

➢ Three-wire control mode 1:
This mode defines SB2 as an enable terminal, the running command is generated by SB1 or SB3, and controls the running direction at the same time. Inverter operation SB2 is in a closed state, and terminal SB1 or SB2 generates a rising edge signal to control the inverter operation and direction; when the inverter stops, it is necessary to disconnect terminal SB2 to complete the shutdown.

Table 6-3-3

Parameter number	Set value	Note
P03.00	3	The source of the start command is S1
P03.01	5	The source of the reverse start command is S3
P03.04	4	The source of the stop command is S2
P03.20	2	S1 type is rising edge
P03.21	1	S2 type is reverse logic
P03.22	2	S3 type is rising edge

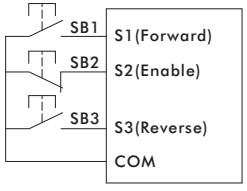

SB1	SB2	SB3	Operate command
— —	0	— —	Stop
↑	1	— —	Forward
— —	1	↑	Reverse

Chart 6-3-5

➢ Three-wire control mode 2:
This mode defines SB2 as an enable terminal, the run command is generated by button SB1, and the direction command is controlled by switch K. When the inverter is running, terminal SB2 needs to be in the closed state. Terminal SB1 generates a rising edge signal. The inverter starts to run. The state of switch K determines the running direction. When the inverter stops, terminal SB2 needs to be disconnected to complete the shutdown.

Table 6-3-4

Parameter number	Set value	Note
P03.00	3	The source of the start command is S1
P03.02	5	The source of the reverse command is S3
P03.04	4	The source of the stop command is S2
P03.20	2	S1 terminal command type is rising edge
P03.21	1	S2 terminal command type is reverse logic
P03.22	0	S3 terminal command type is positive logic

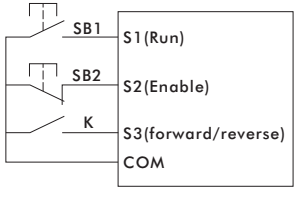

SB1	SB2	K	Operate command
— —	0	— —	Stop
↑	1	OFF	Forward
↑	1	ON	Reverse

Chart 6-3-6

Parameter number	Function	Setting range	Unit	Factory Value
P03.28	S Input filtering	1~16		4
P03.29	Start signal enable mode	0: Always enabled; 1: Need to re-enable after power on; 2: Need to re-enable after free stop or safe stop; 3: Need to re-enable after power-on, free stop or safe stop.		0

▪ Function: Control S terminal input effect and enable mode

➢ S input filtering: S input signal is filtered, the larger the parameter value setting, the more obvious the filtering effect.

➢ Start signal enable mode: When the start command comes from the external terminal, the safety of the inverter is improved.

Set parameter P03.29 to 0. During power-up, the inverter detects that the start command terminalis valid, and the inverter starts immediately.

Set parameter P03.29 to 1. During power-up, even if the inverter detects that the start command terminal is valid, the inverter will not start. Only when the terminal is re-enabled, the inverter can start.

Set parameter P03.29 to 2. After free stop or safe stop, even if the inverter detects that the start command terminal is valid, the inverter will not start. Only the terminal is enabled again, the inverter can start.

Set parameter P03.29 to 3, the terminal needs to be re-enabled after power-on, free stop or safe stop before the inverter can start.

Parameter number	Function	Setting range	Unit	Factory Value
P03.30	Y1 terminal source (RA、RB、RC or RA1、RB1、RC1)	0: Always 0; 1: Always 1; 2: Stopped; 3: Running; 4: Fault; 5: Warning; 6: Reversing; 7: Ready; 64: STO state; 100 ~ 9999: Address		3
P03.31	Y1 terminal source bit	0~31		0
P03.32	Y2 terminal source (RA2、RB2、RC2)	0: Always 0; 1: Always 1; 2: Stopped; 3: Running; 4: Fault; 5: Warning; 6: Reversing; 7: Ready; 64: STO state; 100 ~ 9999: Address		4
P03.33	Y2 terminal source bit	0~31		0
P03.34	Y3 terminal source (RA3、RB3、RC3)	0: Always 0; 1: Always 1; 2: Stopped; 3: Running; 4: Fault; 5: Warning; 6: Reversing; 7: Ready; 64: STO state; 100 ~ 9999: Address		5
P03.35	Y3 terminal source bit	0~31		0

▪ Function: Select the signal source of the digital output terminal

➢ Principle explanation:
The terminal source setting value is greater than or equal to 100 (address mode), the address is the selected parameter number, and the actual value is determined by the current value of the selected parameter number. bit source of terminal source is set bit selection. When terminal source is address 100 ~ 9999, the bit setting is valid. The terminal source setting value is less than 100 (non-address mode), and the terminal source bit need not be set The function description of the terminal source is as follows:

Table 6-3-5

Set value	Function	Description
0	Always 0	Y terminal output is always 0
1	Always 1	Y terminal output is always 1
2	Stopped	In the stopped state, Y terminal output is 1
3	Running	In the running state, Y terminal output is 1
4	Fault	In the fault state , Y terminal output is 1
5	Alarm	In the alarm state, Y terminal output is 1
6	Reversing	In reverse state,Y terminal output is 1
7	Ready	In the ready state, Y terminal output is 1
64	STO state	In STO state ,Y terminal output is 1
100~9999	Address	Select parameters as Y output source

Parameter number	Function	Setting range	Unit	Factory Value
P03.36	Y1 output delay time	0.000~6000.000	s	0.000
P03.37	Y2 output delay time			
P03.38	Y3 output delay time			

■ Function: Set Y1, Y2, Y3 output delay time

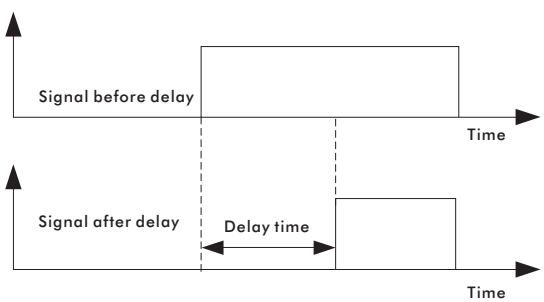

Figure: Set Y1, Y2, Y3 output delay time

Parameter operation	Function	Setting range	Unit	Factory Value
P03.39	AI filter time	0.100~600.000	s	0.100

■ Function: Set AI filter time

➢ Principle explanation:
Adjust the sensitivity of the analog input, and increase the value appropriately to enhance the anti-interference of the analog, but it will reduce the sensitivity of the analog input.

Parameter number	Function	Setting range	Unit	Factory Value
P03.40	AI1 signal type	0: Voltage input; 1: Current input		0
P03.41	AI1 low-end voltage (current)	-999999.000~999999.000	V(mA)	0.000
P03.42	AI1 high-end voltage (current)			10.000
P03.43	AI1 low-end setting	-999999.000~999999.000	%	0.000
P03.44	AI1 high-end setting			100.000

■ Function: Analog input AI1 setting

➢ AI1 signal type: select input signal type, set value is 0, voltage signal input; set value is 1, current signal input.
➢ AI1 low-end voltage (current): set the minimum voltage (current) of the input signal.
➢ AI1 high-end voltage (current): set the maximum voltage (current) of the input signal.
➢ AI1 low-end setting: set the corresponding value of low-end voltage (current).
➢ AI1 high-end setting: set the corresponding value of high-end voltage (current).

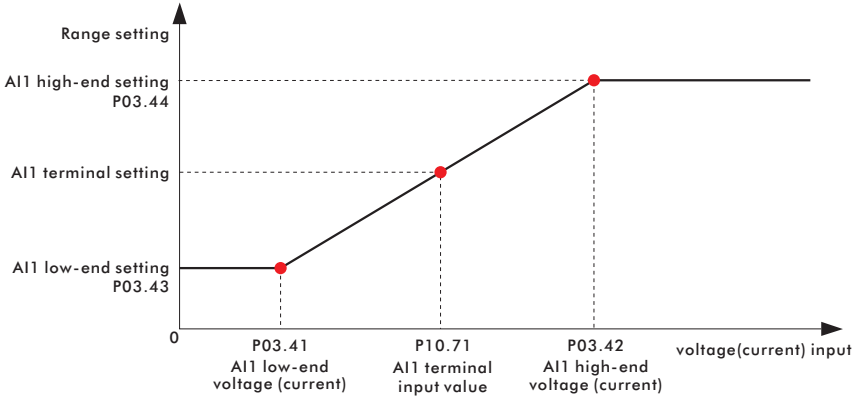

Figure 6-3-8 AI setting

Parameter number	Function	Setting range	Unit	Factory Value
P03.45	AI2 signal type	0: Voltage input; 1: Current input		0
P03.46	AI2 low-end voltage (current)	-999999.000~999999.000	V(mA)	0.000
P03.47	AI2 high-end voltage (current)			10.000
P03.48	AI2 low-end setting	-999999.000~999999.000	%	0.000
P03.49	AI2 high-end setting			100.000

■ Function: Analog input AI2 setting

➢ For details, please refer to P03.40 ~ P03.44.

Parameter number	Function	Setting range	Unit	Factory Value
P03.60	AO1 signal type	0: Voltage output; 1: Current output		0
P03.61	AO1 signal source	0: Always 0; 1: Always 10V / 20mA; 2: Output frequency; 3: Motor current; 4: Output voltage; 5: Motor torque; 6: Output power; 7: Set frequency 100~ 9999: Refer to the value of parameter number		2
P03.62	AO1 low-end setting	-999999.000~999999.000		0.000
P03.63	AO1 high-end setting			50.000
P03.64	AO1 low-end voltage (current)	-999999.000~999999.000	V(mA)	0.000
P03.65	AO1 high-end voltage (current)			10.000

■ Function: Analog output AO1 setting

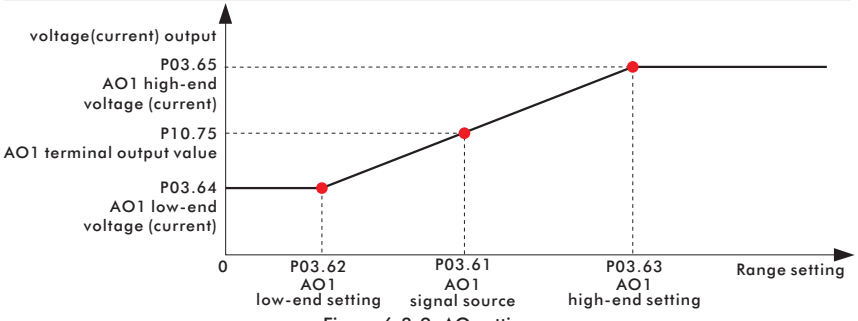

Figure 6-3-9 AO setting

- AO1 signal type: select the output signal type, set value is 0, voltage signal output; set value is 1, current signal output.
- AO1 signal source: select the signal source of AO1 output, 0: always 0; 1: always 10V / 20mA; 2: output frequency; ...
- AO1 low-end setting: set the minimum value of AO1 source.
- AO1 high-end setting: set the maximum value of AO1 source.
- AO1 low-end voltage (current): set the minimum voltage (current) of the output signal.
- AO1 high-end voltage (current): set the maximum voltage (current) of the output signal.
- Principle explanation:
  As shown in Fig. 6-3-9, set the AO1 signal source, check the P10.75 (AO1 terminal output value) of the AO1 terminal output value, or measure with a multimeter. The function description of AO1 signal source is as follows:

Table 6-3-6

Set value	Function	Description
0	Always 0	Analog AO1 output has been 0
1	Always 10V / 20mA	Analog AO1 output has been 10V / 20mA
2	Output frequency	Analog AO1 output is output frequency
3	Motor current	Analog AO1 output is motor current
4	Output voltage	Analog AO1 output is output voltage
5	Motor torque	Analog AO1 output is motor torque
6	Output power	Analog AO1 output is output power
7	Set frequency	Analog AO1 output is set frequency
100~9999	Parameter number	Select parameter as the source of analog AO1 signal

Parameter number	Function	Setting range	Unit	Factory Value
P03.66	AO2 signal type	0: Voltage output; 1: Current output		0
P03.67	AO2 signal source	0: Always 0; 1: Always 10V / 20mA; 2: Output frequency; 3: Motor current; 4: Output voltage; 5: Motor torque; 6: Output power; 7: Set frequency 100~ 9999: The value of the reference parameter number		3
P03.68	AO2 low-end setting	-999999.000~99999.000		0.000
P03.69	AO2 high-end setting			50.000
P03.70	AO2 low-end voltage (current)	-999999.000~999999.000	V(mA)	0.000
P03.71	AO2 high-end voltage (current)			10.000

■ Function: Analog output AO2 setting

- For details, please refer to P03.60 ~ P03.65.

6.4 Group 04 parameters: PID control

Parameter number	Function	Setting range	Unit	Factory Value
P04.00	PID proportional gain	0.000~10.000	%	0.010
P04.01	PID integration time	0.001~9999.000	s	10.000
P04.02	PID differential gain	0.000~9999.000	%	0.000
P04.03	PID forward feedback coefficient	0~500	%	0
P04.04	PID sampling time	0.001~9999.000	s	0.004
P04.05	PID output upper limit	-1000.000~1000.000	%	100.000
P04.06	PID output lower limit		%	0.000
P04.07	PID output filter time	0.000~600.000	s	0.000
P04.09	PID range	0.001~99999.000		100.000

■ Function: Simple PID control, enable PID control when P02.13 or P02.14 is set to 8

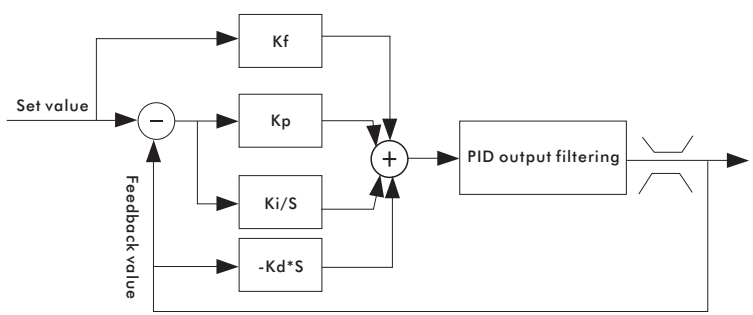

Figure 6-4-1 PID closed loop control

- PID proportional gain: Determine the adjustment intensity of the entire PID regulator. The greater the proportional gain, the greater the adjustment intensity.
- PID integration time: determine the speed of PID regulator to adjust the deviation of PID feedback and given amount. The smaller the integration time, the greater the adjustment intensity.
- PID differential gain: determine the strength of PID regulator to adjust the deviation rate of PID feedback and given amount. The greater the differential gain, the greater the adjustment intensity.

- PID feedforward coefficient: generally use a smaller feedforward coefficient; otherwise, use a larger feedforward coefficient to make feedforward adjustment play a major role.
- PID sampling time: generally set 5~10 times smaller than the response time of the controlled object.
- PID output upper limit: the maximum value of PID adjustment output, higher than the maximum value, PID output upper limit.
- PID output lower limit: the minimum value of PID adjustment output, below the minimum value, PID output lower limit.
- PID output filtering time: The filtering time increases, weakens the output signal mutation, and reduces the closed-loop system response performance.
- PID range: according to the actual feedback range setting, if the setting is less than the feedback range PID does not work.
- Method of adjusting proportional gain and integration time:
  First adjust the integration time to the minimum, set the differential gain to 0, observe the PID feedback value and adjust the PID proportional gain. Slowly increase the integration time, repeatedly adjust the two parameters of proportional gain and integration time according to the response of the PID feedback value, change the PID given value multiple times within the PID given range, and adjust the proportional gain and integration time until Achieve satisfactory performance within the entire working range. Differential gain can be adjusted according to the need of overshoot, in most cases the differential link is generally not used.
  Paramet-er NO. Parameter Name Setting range Unit Factory value

Parameter number	Function	Setting range	Unit	Factory Value
P04.11	PID sleep frequency	0.000~500.000	%	0.000
P04.12	PID enter sleep time	0.000~3600.000	s	0.000
P04.13	PID wake-up deviation	0.000~100.000	%	0.000
P04.14	PID enter wake-up time	0.000~3600.000	s	0.000
P04.15	PID sleep action	0: Do not sleep; 1: PID stop; 2: Decelerate to stop; 3: Free to stop; 4: Pause; 5: Lowest frequency operation		0

■ Function: PID control function selection

- Principle explanation:
  As shown in Figure 6-4-2, the PID output value is less than the P04.11 sleep frequency. After the time set by the parameter P04.12 (PID enters sleep time), the PID enters sleep according to the sleep action; the PID wakeup value is greater than P04.13 wakeup Deviation (wake-up value = percentage of set value), after the time set by parameter P04.14 (PID enters wake-up time), PID restarts.
- PID sleep frequency: set the sleep quasi-frequency.
- PID wake up deviation: percentage based on setting. For example, when 10 kg is set and the wake-up deviation is 20%, the wake-up deviation is 2 kg (20% × 10). When the actual pressure is less than 8 kg, the wake-up state starts.
- PID enters sleep time: the inverter will enter sleep after reaching the sleep frequency and meeting the sleep time.
- PID enters the wake-up time: the inverter will restart after reaching the wake-up deviation and meeting the wake-up time.
- PID sleep action selection: PID enters sleep according to the set sleep action.
  0 Do not sleep: PID operation is not changed.
  1 PID stop: PID stops working.
  2 Deceleration stop: The inverter decelerates to stop.
  3 Free stop: The inverter freely stops.
  4 Pause: The inverter pauses.
  5 Lowest frequency operation: run at the lowest frequency, see parameter P04.06 (PID output lower limit frequency) for lowest frequency setting.
  Note: When the PID sleep action selects deceleration stop or free stop, sleep will cause the start signal to be cleared once. Therefore: when the start signal comes from the keyboard, the start signal will be cleared after sleep. If the automatic wake-up function is required, select PID to stop or pause or the lowest frequency operation for PID sleep action. When the start signal comes from the S terminal input or communication (the communication continues to send the start signal), the PID sleep action will not affect the PID wakeup.

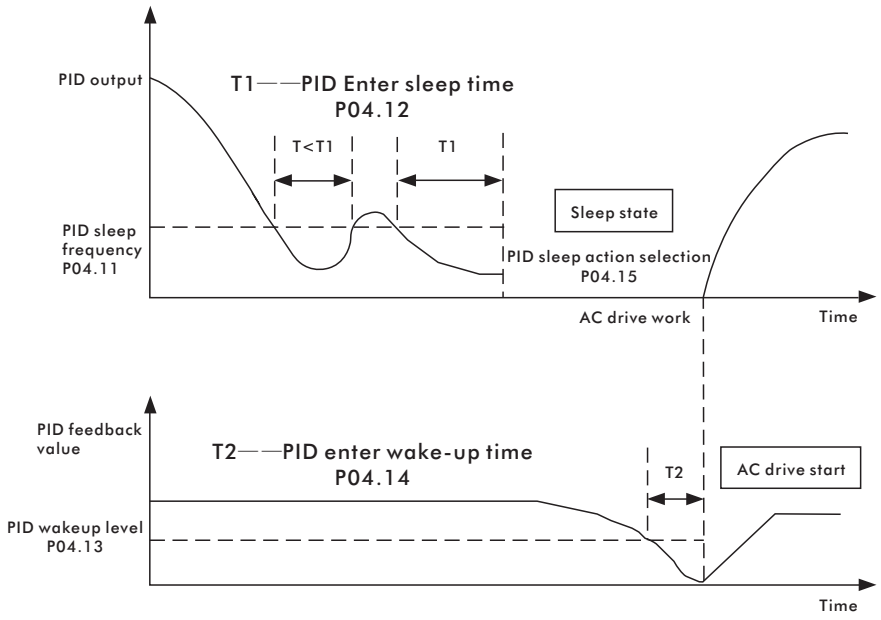

Figure 6-4-2 PID sleep wake up

Parameter number	Function	Setting range	Unit	Factory Value
P04.90	PID status	0~4294967295		

■ Function: indicates the PID status word (see the table below for the definition of each bit).

Table 6-4-1

Status word (bit)	Definition
0	PID is stopped
1	PID is running
5	PID goes to sleep

6.5 Group 05 parameters: system control

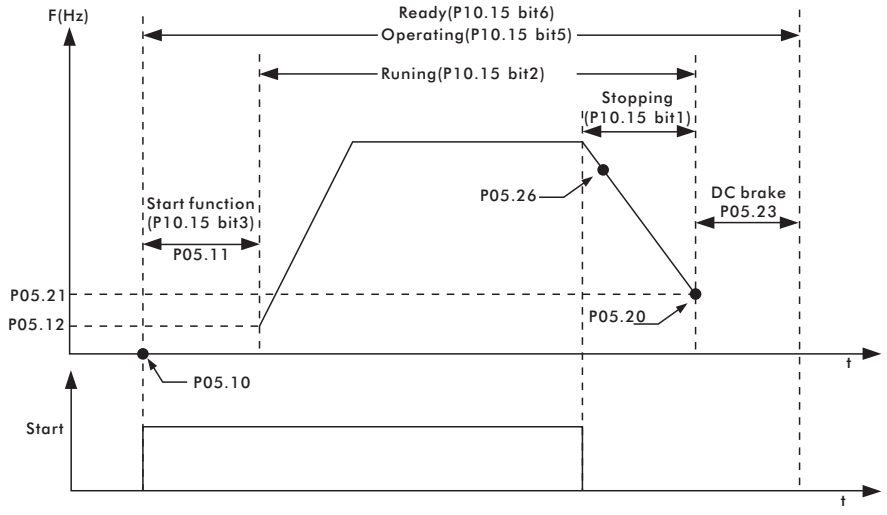

Figure 6-5-1 System control

Parameter number	Function	Setting range	Unit	Factory Value
P05.00	Control mode	0: VF; 1: Open loop vector 1		1

■ Function: Select motor control algorithm

Parameter number	Function	Setting range	Unit	Factory Value
P05.06	Forward and reverse switching time	0.000~6000.000	s	0.000

■ Function: control forward and reverse switching dead zone time

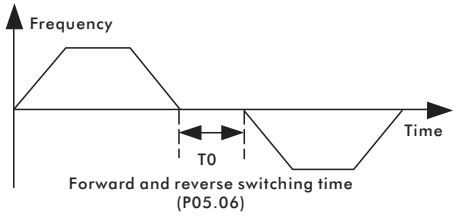

Figure 6-5-2 Switching between forward and reverse

Parameter number	Function	Setting range	Unit	Factory Value
P05.07	Forced change direction	0: No effect; 1: Forced change direction		0

■ Function: control the commutation function, when the parameter P05.07 is set to 1, change the current running direction

Parameter number	Function	Setting range	Unit	Factory Value
P05.08	Motor frequency upper limit	-1020.000~1020.000	Hz	55.000

■ Function: Motor output frequency limit

➢ Motor frequency upper limit: define the motor operating frequency upper limit.

Parameter operation	Function	Setting range	Unit	Factory Value
P05.10	Start function	0: When the time of P05.11 is over, run according to the frequency of P05.12; 1: On speed start; 2: DC injection 3: Run at the frequency of P05.12 within the time of P05.11		0
P05.11	Start Time	0.000~60000.000	s	0.000
P05.12	Start frequency	0.000~100.000	Hz	0.000

■ Function: Set Startup function

➢ Principle explanation:

When the system starts up, it will work according to the setting start function within the setting start time. When start function is end, if the setting frequency is greater than the start frequency, the system starts to run with the start frequency as the start frequency; If the setting frequency is less than the start frequency, the system starts to run at the setting frequency.

➢ Start function:

0: The starting mode without output frequency can meet the starting time setting of P05.11, and the starting frequency of P05.12 starts to run.

1: Speed start, search for motor speed in rotation, start smooth starting without impact from the speed searched.

2: DC injection, inverter starts in the mode of "DC injection before starting".

3: After receiving the start command, the inverter runs at the starting frequency of P05.12 firstly, and then runs at the setting frequency after meeting the time of P05.11.

Parameter number	Function	Setting range	Unit	Factory Value
P05.14	On speed start mode	0: All directional; 1: Set value direction; 2 ~ 3: reserved		0

■ Function: Set the speed start function (set P05.10 to 1 speed start)

➢ Speed start mode:

0: Two-way, follow the forward or reverse direction for speed tracking judgment.

1: Set value direction, follow the set direction for speed tracking judgment.

Parameter number	Function	Setting range	Unit	Factory Value
P05.19	DC injection current	0.000~200.000	%	100.000

■ Function: Set the DC injection current size (set P05.10 to 2 DC injection)

➢ Principle explanation:

When the starting method is DC injection, the DC braking current needs to be set to 100% corresponding to the rated current of the inverter.

Parameter number	Function	Setting range	Unit	Factory Value
P05.20	Stop function	Units: 0: Free parking; 1: DC braking; Tens: 1: Precise parking		0
P05.21	Stop frequency	0.000~1000.000	Hz	0.000

■ Function: Set stop function

➢ Principle explanation:

During the stop process, when the output frequency is less than the stop frequency, the stop function starts to work.

Precise parking: The motor rotates the same number of revolutions at any speed to achieve consistent repeatability of the parking position. To achieve the best results, the deceleration time should be as long as possible so as not to trigger the overvoltage and overcurrent stall prevention functions.

Parameter number	Function	Setting range	Unit	Factory Value
P05.22	DC braking	0.000~300.000	%	100.000
P05.23	DC braking time	0.000~1000.000	s	0.000
P05.24	Demagnetization time ratio	0.000~1000.000	%	10.000

■ Function: Set the DC braking parameters of the stop function

➢ DC braking: set DC brake 0.000~200.000 as current brake and 200.001~300.000 as voltage brake.

➢ DC braking time: set the DC braking time.When set to 1000.000, always braking until receiving free stop or start signal.

➢ Demagnetization time ratio: Generally, no modification is required. For occasions requiring accurate positioning and strict deceleration time, reduce the demagnetization time ratio; where the requirements for deceleration time are not strict, appropriately increase the demagnetization time ratio to reduce the deceleration current impact.

Parameter number	Function	Setting range	Unit	Factory Value
P05.26	Magnetic flux brake activation frequency	0.000~1000.000	Hz	0.000
P05.27	Magnetic Flux braking coefficient	100~200	%	100
P05.28	Magnetic Flux braking time	0.000~1000.000	s	0.000

■ Function: Set the flux braking parameters of the stop function

➢ Principle explanation:

During the stop, when the output frequency is less than the flux braking activation frequency, the flux braking function starts to take effect during the flux braking time. Flux braking is generally used in situations that require rapid deceleration, but excessive use will cause the motor to heat up.

Parameter number	Function	Setting range	Unit	Factory Value
P05.30	Brake resistance mode	0: Invalid; 1: Maximum duty cycle		1

■ Function: Braking resistor braking mode parameter setting

Parameter number	Function	Setting range	Unit	Factory Value
P05.50	Auto reset mode	0~9999		0
P05.51	Auto reset time	0.000~600.000	s	10.000

■ Function: Set automatic reset function

➢ Principle explanation:

If the parameter P05.50 is not 0, the automatic reset function is valid, the number of automatic resets is the set value of P05.50,a and the automatic reset time is the time when the fault is delayed. If P05.50 is set to 9999, it can be reset any number of times. If P05.50 is set greater than 0 and less than 9999, when the number of automatic resets exceeds P05.50, the inverter will report a fault.

Parameter number	Function	Setting range	Unit	Factory Value
P05.60	Auto energy saving minimum magnetic flux	30~100	%	100
P05.61	Auto energy saving start frequency	0.000~200.000	Hz	5.000

■ Function: Set automatic energy saving function

➢ Principle explanation:

Automatic energy saving automatically adjusts the output voltage according to the motor load to achieve the purpose of energy saving. When P06.70 is set to 1, P05.60 set value is less than 100 and the running frequency is greater than P05.61, the automatic energy saving function is effective.

Parameter number	Function	Setting range	Unit	Factory Value
P05.63	Manual energy saving magnetic flux	30~90	%	70

■ Function: Set manual energy-saving magnetic flux size

➢ Principle explanation:

When P06.70 is set to 1 and the automatic energy saving function is invalid, manual energy saving is effective. If P05.63 is set to 100, manual energy saving is invalid. Adjust the energy saving effect by setting the parameter P05.63 magnetic flux size. The smaller the set value, the more obvious the energy saving effect, but the torque response speed becomes slower

Parameter number	Function	Setting range	Unit	Factory Value
P05.71	Current upper limit	0~300	%	150

■ Function: When the running current is greater than the upper current limit, the overcurrent stall function is activated. The current reference is the motor rated current (P06.14).

Parameter number	Function	Setting range	Unit	Factory Value
P05.76	Upper limit of electric torque	0.000~900.000	%	150.000
P05.77	Upper limit of regenerative torque	0.000~900.000	%	150.000

■ Function: Set torque limit function

➢ Principle explanation:

Parameters P05.76 and P05.77 set the upper limit of electric and regenerative torque.

Parameter number	Function	Setting range	Unit	Factory Value
P05.80	Over-voltage control	0: Invalid; 1: Valid at all times		1
P05.82	Over-voltage control scale coefficient	0~200	%	100
P05.83	Over-voltage control integral coefficient	1~10000	%	100

■ Function: Set overvoltage control function

➢ Principle explanation:
When the regenerative voltage exceeds the set threshold, the overvoltage control starts to activate the overvoltage stall function according to the setting of parameter P05.80.

Parameter number	Function	Setting range	Unit	Factory Value
P05.85	Under-voltage control	Units: grid power-down action mode 0: Invalid; 1: Instantaneous stop no stop; 2: Safe parking; 3 ~ 6: reserved Tens: under-voltage action mode of power grid 0: Invalid; 1: Safe frequency reduction		0
P05.86	Power grid voltage level	100~800	V	*

■ Function: Set undervoltage control function

➢ Principle explanation:
When the input voltage is lower than the grid power-down level, the power-down action starts to activate according to the parameter P05.85 bit setting. Grid undervoltage means that the grid voltage is lower than the normal voltage, and the undervoltage action starts to activate according to the parameter P05.85 tens place setting.

Parameter number	Function	Setting range	Unit	Factory Value
P05.90	AVR function selection	0: invalid; 1: valid; 2: Only invalid when decelerating		1
P05.91	AVR function damping factor	0~100	%	100

■ Function: Set AVR function

➢ Principle explanation:
AVR is used to compensate the fluctuation of grid voltage and keep the output voltage constant. When P05.90 is selected as 2, it is conducive to rapid deceleration.

6.6 Group 06 parameters: Motor model

Parameter number	Function	Setting range	Unit	Factory Value
P06.00	Motor parameter self-learning	0: Invalid 1: Complete self-learning 2: Simple self-learning		0

■ Function: Online learning of motor parameters

➢ Principle explanation:
During complete self-learning and simple self-learning, the motor will not rotate. After self-learning, the parameters such as motor stator impedance and rotor impedance will change. Before motor parameter self-learning, input motor nameplate parameters P06.10 ~ P06.15.
Self-learning process: Set P06.00, press the run key to start self-learning. When the self-learning is normal, the keyboard displays L0000. After the self-learning is completed, press the stop key to exit the self-learning and return to the normal state.

Parameter number	Function	Setting range	Unit	Factory Value
P06.05	Carrier frequency	2~16	kHz	*

■ Function: Set carrier frequency

Parameter number	Function	Setting range	Unit	Factory Value
P06.06	Over-modulation function	0: Invalid; 1: Valid		1

■ Function: Set over modulation function

Parameter number	Function	Setting range	Unit	Factory Value
P06.10	Motor type	0: Asynchronous motor; 1: Surface mount permanent magnet synchronization; 2: Salient pole permanent magnet synchronization; 4: Single-phase motor		0
P06.11	Motor rated Power	0.000~100000.000	kW	*
P06.12	Motor rated voltage	0~1000	V	*
P06.13	Motor rated frequency	1~3000	Hz	*
P06.14	Motor rated current	0.00~1000.00	A	*
P06.15	Motor rated speed	10~65535	rpm	*
P06.16	Motor power factor	0.00~1.00		*
P06.17	Number of motor poles	2~100		*
P06.18	Motor rated torque	0.1~10000.0	N·m	*
P06.19	Motor no-load current	0.00~1000.00	A	*

■ Function: Set motor parameters

Parameter number	Function	Setting range	Unit	Factory Value
P06.20	PM motor back EMF/rev	1.000~10000.000	mV/rpm	*

■ Function: Set the back EMF corresponding to the rated speed of the permanent magnet synchronous motor

Parameter number	Function	Setting range	Unit	Factory Value
P06.40	Stator impedance	0.000~99.990	Ω	*
P06.41	Rotor impedance	0.000~99.990	Ω	*
P06.42	Stator leakage reactance	0.000~999.990	mH	*
P06.44	Motor main reactance	0.00~999.90	mH	*

■ Function: Motor model parameters (obtained by self-learning of motor parameters)

Parameter number	Function	Setting range	Unit	Factory Value
P06.50	PM d-axis reactance	0.000~1000.000	mH	*
P06.51	PM q-axis reactance	0.001~9999.000	mH	*
P06.52	PM d-axis reactance saturation coefficient	0.0~100.0	%	*
P06.53	PM q-axis reactance saturation coefficient	0.0~100.0	%	*
P06.54	Maximum field weakening current d	10~400	%	100
P06.55	Maximum field weakening current q	10~400	%	100

■ Function: Permanent magnet synchronous motor model parameters (obtained by self-learning of motor parameters)

Parameter number	Function	Setting range	Unit	Factory Value
P06.60	Single-phase motor turns ratio	0.200~1.800		1.000

■ Function: Set single-phase motor turn ratio

Parameter number	Function	Setting range	Unit	Factory Value
P06.70	Load type	0: Constant torque; 1: Fan water pump; 2: Promotion; 3: Reserved		0

■ Function: Select the appropriate load type to obtain the corresponding torque characteristics, optimize the control algorithm

Parameter number	Function	Setting range	Unit	Factory Value
P06.80	Motor cable compensation strength	0~500		0

■ Function: This parameter needs to be set when the motor cable exceeds 100 meters, and 20 is recommended to set.

6.7 Group 07 parameters: control algorithm

Parameter number	Function	Setting range	Unit	Factory Value
P07.50	Slip compensation	-500~500	%	100
P07.51	Slip compensation filter constant	1~10000	%	100

■ Function: Set vector control slip

➢ Slip compensation: adjust the speed stability accuracy of the motor. When the motor is under heavy load, the speed is low, increase this parameter, otherwise reduce this parameter. (For the need of soft load, provide negative value selection)

Parameter number	Function	Setting range	Unit	Factory Value
P07.52	Resonance suppression coefficient	0~10000	%	100
P07.53	Low-speed suppression filter constant	1~10000	%	100
P07.54	High-speed suppression filter constant	1~10000	%	100

■ Function: Set resonance suppression coefficient, high and low speed suppression filter constant

➢ Principle explanation:
The no-load frequency conversion control system is prone to resonance, and the resonance suppression function helps eliminate vibration.

Parameter number	Function	Setting range	Unit	Factory Value
P07.55	Automatic torque boost coefficient	0~300	%	100

■ Function: Set automatic torque boost coefficient

➢ Principle explanation:
According to the load, the output voltage at low frequency is automatically compensated to improve the load capacity at low frequency.

Parameter number	Function	Setting range	Unit	Factory Value
P07.57	Low speed minimum current	0~300	%	50
P07.58	Static friction lift coefficient	0~10000	%	100
P07.59	Static friction lift time	0.0~1000.0	S	0.0

■ Function: Set low speed minimum current and static friction parameters

➢ Principle explanation:
Low speed minimum current given the minimum current at low speed, proper settings help to improve the low speed load capacity. The static friction lifting function automatically compensates the output voltage at the start according to the load, thereby increasing the starting torque.

Parameter number	Function	Setting range	Unit	Factory Value
P07.71	VF curve-F1	0.0~3000.0	Hz	50.0
P07.72	VF curve-F2			50.0
P07.73	VF curve-F3			50.0
P07.74	VF curve-F4			50.0
P07.75	VF curve-V0	0~10000	V	0
P07.76	VF curve-V1			*
P07.77	VF curve-V2			*
P07.78	VF curve-V3			*
P07.79	VF curve-V4			*

■ Function: Set VF curve

➢ Principle explanation:
Set the V / F curve in V / F control mode. When vector control 1 is used, the corresponding data points of the V / F curve can be set to adjust the control characteristics of the corresponding control points.

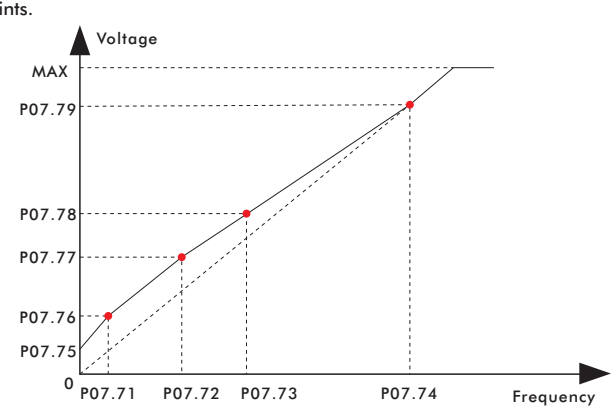

Figure 6-7-1 VF control curve

6.8 Group 09 parameters: system protection

Parameter number	Function	Setting range	Unit	Factory Value
P09.00	Input phase loss action	0: Fault; 1: Alarm; 2: Invalid		2

■ Function: Set input phase loss action

Parameter number	Function	Setting range	Unit	Factory Value
P09.04	Output phase loss detection	0: Invalid; 1: Valid		1

■ Function: Set the action when output phase loss protection

Parameter number	Function	Setting range	Unit	Factory Value
P09.06	ETR selection	0: Invalid; 1: Alarm; 2: Fault		2

■ Function: Select ETR action

Parameter number	Function	Setting range	Unit	Factory Value
P09.49	STO display selection	0: STO/STO1/STO2/STO3 state is not displayed; 1: Display alarm in STO state; 2: Display failt in STO state		0

■ Function: STO display selection

6.9 Group 10 parameters: system status

Parameter number	Function	Setting range	Unit	Factory Value
P10.05	Software version number			

■ Function: Indicate the inverter software version number.

Parameter number	Function	Setting range	Unit	Factory Value
P10.10	Control word	0~4294967295		

■ Function: Indicates the system control word.
The definition of each bit is shown in the table below:

Table 6-9-1

Control word(bit)	Definition
0	Start
1	Reverse
2	Start reverse
3	JOG
4	Stop
5	Emergency stop
6	Safe stop
7	Reset
9	Parameter self-learning
10	Tripping
11	Pause
13	UP (incremental)
14	DOWN (decreasing)

Parameter number	Function	Setting range	Unit	Factory Value
P10.11	Set value	-65535.0~65535.0		

■ Function: Indicate the set frequency value, see Figure 6-2-1

Parameter number	Function	Setting range	Unit	Factory Value
P10.15	Current state	0~4294967295		

■ Function: Indicates the system status word (see the table below for the definition of each bit). The specific meaning is shown in Figure 6-5-1.

Table 6-9-2

Status word(bit)	Definition
0	The power is being cut off
1	Stopping
2	Running
3	Start function starts
4	Parameter self-learning starts
5	Operating
6	Ready
10	Fault
11	Alarm
12	STO status

Parameter number	Function	Setting range	Unit	Factory Value
P10.16	Fault state word 1	0~4294967295		
P10.17	Fault state word 2	0~4294967295		

■ Function: Indicate the system fault status word
(see the table below for the definition of each bit)

Table 6-9-3

Fault status word 1 (bit)	Definition
1	System abnormality
4	Ground fault
5	Short circuit to ground
6	Output short circuit
7	Output overcurrent
8	DC bus overvoltage
9	DC bus undervoltage
10	Inverter overheating
11	Self-learning failure
13	Rectifier bridge overheating
14	U phase missing phase
15	V phase missing phase
16	W phase missing phase
19	No motor connection
20	Input phase loss
21	Inverter overload
22	Overtorque
24	Motor overheating
25	Motor overload
26	Current limit
27	Input power down
Fault status word 2 (bit)	**Definition**
31	External fault
33	STO safe torque stop
34	STI1 internal circuit abnormal
35	STI2 internal circuit abnormal
36	STI1 and S TI2 internal loop abnormal

Parameter number	Function	Setting range	Unit	Factory Value
P10.18	Alarm state word	0~4294967295		

■ Function: indicate the system alarm status word
(see the description of the above table for the definition of each bit)

Parameter number	Function	Setting range	Unit	Factory Value
P10.20	Output frequency absolute value	0.0~65535.0	Hz	
P10.21	Output frequency	-65535.0~65535.0	Hz	
P10.22	Output current	0.00~65535.00	A	
P10.23	Output voltage	0.0~65535.0	V	
P10.24	Output torque	0.000~65535.000	N·m	

■ Function: Indicate output information

Parameter number	Function	Setting range	Unit	Factory Value
P10.25	DC voltage	0.0~65535.0	V	
P10.26	Inverter temperature	0~65535	℃	
P10.27	Inverter hot load	0~65535	%	
P10.28	Motor hot load	0~65535	%	
P10.30	power	0.000~65535.000	kW	
P10.31	Energy consumption	0.000~4294967.295	kW*h	

■ Function: Indicate the running status information of the inverter

Parameter number	Function	Setting range	Unit	Factory Value
P10.40	Hours of power on	0.000~4294967.295	h	
P10.41	Number of power-on	0~4294967295		

■ Function: Instruct inverter statistics

Parameter number	Function	Setting range	Unit	Factory Value
P10.44	Communication timeout	0.000~9999.000	s	

■ Function: Monitor the communication timeout of inverter and upper computer

➢ Principle explanation:
After the inverter is powered on, if there is no communication with the upper computer, the communication timeout is 0.
After only one normal communication, when the communication is normal, the timeout is less than 0.1 data change. At this time, if the communication is abnormal, the communication timeout will be accumulated and counted. The user can use the comparator to judge the communication failure shutdown. Check the parameters as below:

Parameter number	Function	Setting Value
P01.30	Virtual terminal setting	1340
P03.08	Fault command source	17
P12.00	Free parameter 1	3.000
P16.00	Comparator 1 input parameter selection	1044
P16.01	Comparator 1 comparison parameter selection	1200
P16.02	Comparator 1 configuration	2
Function description: When communication timeout ≥3s, the inverter will stop in case of fault, and the keyboard will display E0063.		

Parameter number	Function	Setting range	Unit	Factory Value
P10.60	Current alarm number	0~4294967295		
P10.61	Current fault number	0~4294967295		
P10.62	Last fault number	0~4294967295		
P10.63	The first two fault numbers	0~4294967295		

■ Function: Indicate the inverter fault information, (refer to chapter 10.2 Troubleshooting)

Parameter number	Function	Setting range	Unit	Factory Value
P10.70	S input terminal state	0~4294967295		
P10.71	AI1 terminal input value	-65535.000~65535.000	%	
P10.72	AI2 terminal input value	-65535.000~65535.000	%	
P10.74	Y terminal output state	0~4294967295		
P10.75	AO1 terminal output value	-65535.000~65535.000	%	
P10.76	AO2 terminal output value	-65535.000~65535.000	%	

■ Function: indicate external terminal information

Parameter number	Function	Setting range	Unit	Factory Value
P10.78	Pulse input frequency	0.000~10000.000	kHz	
P10.79	Pulse output frequency	0.000~10000.000	kHz	

■ Function: Indicate pulse input and output frequency

Parameter number	Function	Setting range	Unit	Factory Value
P10.80	Encoder count	0~4294967295		
P10.81	Encoder speed	-9999.000~9999.000	Hz	
P10.82	Encoder angle	0.0~359.9	deg	

■ Function: indicate encoder status

Parameter number	Function	Setting range	Unit	Factory Value
P10.90	Set value 1	-999999.000~999999.000	%	
P10.91	Set value 2	-999999.000~999999.000	%	
P10.92	Set value 3	-999999.000~999999.000	%	

■ Function: Indicate the set value, see Figure 6-2-1

Parameter number	Function	Setting range	Unit	Factory Value
P10.98	Display value 1	-99999.000~99999.000		
P10.99	Display value 2	-99999.000~99999.000		

■ Function: indicate the display value (see P01.68 ~ P01.69 for the source of the display value)

6.10 Group 11 parameters: fault record

Parameter number	Function	Setting range	Unit	Factory Value
P11.10	Current fault output frequency	-999999.0~999999.0	Hz	0.0
P11.11	Curerent fault output current	-999999.00~999999.00	A	0.00
P11.12	Current fault bus voltage	-999999.0~999999.0	V	0.0
P11.13	Current faulty inverter temperature	-999999~999999	℃	0
P11.14	Current fault S terminal state	-999999~999999		0
P11.15	Current fault Y terminal state	-999999~999999		0
P11.16	Accumulated power-on time of the current fault	0.000~4294967.295	h	0.000
P11.20	Output frequency of last fault	-999999.0~999999.0	Hz	0.0
P11.21	Output current of last fault	-999999.00~999999.00	A	0.00
P11.22	Bus voltage of last fault	-999999.0~999999.0	V	0.0
P11.23	Inverter temperature of last fault	-999999~999999	℃	0
P11.24	S-terminal state of last fault	-999999~999999		0
P11.25	Y terminal state of last fault	-999999~999999		0
P11.26	Accumulated power-on time of the last fault	0.000~4294967.295	h	0.000
P11.30	Output frequency of the first two faults	-999999.0~999999.0	Hz	0.0
P11.31	Output current of the first two faults	-999999.00~999999.00	A	0.00
P11.32	Bus voltage of the first two faults	-999999.0~999999.0	V	0.0
P11.33	Inverter temperature of the first two faults	-999999~999999	℃	0
P11.34	S terminal state of the first two faults	-999999~999999		0
P11.35	Y terminal state of th first two faults	-999999~999999		0
P11.36	Accumulated power-on time of the first two faults	0.000~4294967.295	h	0.000

■ Function: record fault information

6.11 Group 12 parameters: free parameters

Parameter number	Function	Setting range	Unit	Factory Value
P12.00 ~ P12.19	Free parameter 1~ Free parameter 20	-999999.000~999999.000		0.000
P12.90 ~ P12.99	Free parameter 91~ Free parameter 100	-999999.000~999999.000		0.000

■ Function: As an interface or intermediate quantity, expand system functions

➢ Principle explanation:
P12.00 ~ P12.19, P12.90 ~ P12.94, automatically save the current value when power off.
P12.95 ~ P12.99: Set the parameter number. The value of P12.90 ~ P12.94 at power-on is given to the parameter number set in P12.95 ~ P12.99.
Only P12.90 ~ P12.99 parameters are automatically saved after power off.

6.12 Group 13 parameters: function output

Parameter number	Function	Setting range	Unit	Factory Value
P13.00	Comparator output	0~4294967295		0
P13.01	Logic output	0~4294967295		0

■ Function: Indicate comparator output (see P16.00 ~ P16.35), logic output result (see P16.36 ~ P16.75)

➢ Comparator output: store all comparator results, bit0 stores comparator 1 results, bit1 stores comparator 2 results, ...
➢ Logic output: store all logical unit results, bit0 stores logical unit 1 results, bit1 stores logical unit 2 results, ...

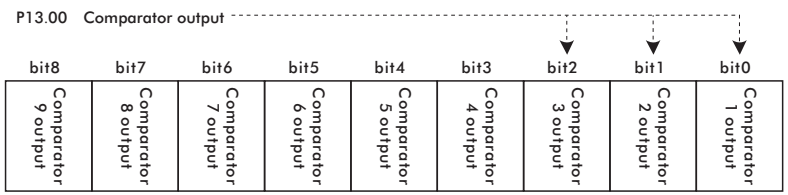

Figure 6-12-1 indicates the output of the comparator

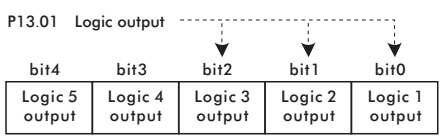

Figure 6-12-2 Indicate the logic output result

Parameter number	Function	Setting range	Unit	Factory Value
P13.02	Linear transformation 1 result	-999999.000~999999.000		0.000
P13.03	Linear transformation 2 result	-999999.000~999999.000		0.000

■ Function: Indicate the result of linear transformation (see P17.00 ~ P17.09)

Parameter number	Function	Setting range	Unit	Factory Value
P13.10	Single arithmetic operation 1 output	-999999.000~999999.000		0.000
P13.11	Single arithmetic operation 2 output	-999999.000~999999.000		0.000
P13.12	Single arithmetic operation 3 output	-999999.000~999999.000		0.000
P13.13	Single arithmetic operation 4 output	-999999.000~999999.000		0.000
P13.14	Single arithmetic operation 5 output	-999999.000~999999.000		0.000

▪ Function: Indicate the output result of single arithmetic operation (P17.16 ~ P17.25)

Parameter number	Function	Setting range	Unit	Factory Value
P13.15	Math operation 1 output	-999999.000~999999.000		0.000
P13.16	Math operation 2 output	-999999.000~999999.000		0.000
P13.17	Math operation 3 output	-999999.000~999999.000		0.000
P13.18	Math operation 4 output	-999999.000~999999.000		0.000

▪ Function: Indicate the output result of mathematical operation (see P17.26 ~ P17.45)

Parameter number	Function	Setting range	Unit	Factory Value
P13.40	Comparator 1 output	0~1		0
P13.41	Comparator 2 output	0~1		0
P13.42	Comparator 3 output	0~1		0
P13.43	Comparator 4 output	0~1		0
P13.44	Comparator 5 output	0~1		0
P13.45	Comparator 6 output	0~1		0
P13.46	Comparator 7 output	0~1		0
P13.47	Comparator 8 output	0~1		0
P13.48	Comparator 9 output	0~1		0

▪ Function: Indicate the bit corresponding to the output of a single comparator (see P16.00 ~ P16.35)

Parameter number	Function	Setting range	Unit	Factory Value
P13.50	Logic 1 output	0~1		0
P13.51	Logic 2 output	0~1		0

▪ Function: Indicate the bit corresponding to the output of a single logic unit (see P16.36 ~ P16.51)

Parameter number	Function	Setting range	Unit	Factory Value
P13.60	Timer 1 current counting	0~4294967295		0
P13.61	Timer 1 current value	0~65535		0
P13.62	Timer 1 current stage	0~16		0
P13.63	Timer 2 current counting	0~4294967295		0
P13.64	Timer 2 current value	0~65535		0
P13.65	Timer 2 current stage	0~16		0

▪ Function: Indicate the timer result (see P18.00 ~ P18.39)

➢ Current timer value: The timer counts, the count value can be suspended or cleared.
➢ Current state of timer: indicates the state of the timer stage, bit0 corresponds to stage 1, bit1 corresponds to stage 2, ...
➢ Timer current stage: indicates the current stage of the timer.

Parameter number	Function	Setting range	Unit	Factory Value
P13.92	virtual address current value 1	0~4294967295		0
P13.93	virtual address current value 2	0~4294967295		0
P13.94	virtual address current value 3	0~4294967295		0
P13.95	virtual address current value 4	0~4294967295		0
P13.96	virtual address current value 5	0~4294967295		0
P13.97	virtual address current value 6	0~4294967295		0
P13.98	virtual address current value 7	0~4294967295		0

▪ Function: virtual address receiving value, referring to P01.32~P01.38 for detailed functions

6.13 Group 14 parameters: encoder

Parameter number	Function	Setting range	Unit	Factory Value
P14.01	Encoder 1 resolution	1~2147483647		1024
P14.02	Encoder 1 direction	0: Forward; 1:Reverse		0

▪ Function: Set encoder parameters

6.14 Group 16 parameters: logic unit

Parameter number	Function	Setting range	Unit	Factory Value
P16.00	Comparator 1 input parameter selection	0~65535		0
P16.01	Comparator 1 comparison parameter selection	0~65535		0
P16.02	Comparator 1 configuration	0: >; 1: <; 2: ≥; 3: ≤; 4: =; 5: ≈; 6: ≠		0
P16.03	Comparator 1 delay time	0.000~99999.000	s	0.000
P16.04	Comparator 2 input parameter selection	0~65535		0
P16.05	Comparator 2 comparison parameter selection	0~65535		0
P16.06	Comparator 2 configuration	0: >; 1: <; 2: ≥; 3: ≤; 4: =; 5: ≈; 6: ≠		0
P16.07	Comparator 2 delay time	0.000~99999.000	s	0.000
P16.08	Comparator 3 input parameter selection	0~65535		0
P16.09	Comparator 3 comparison parameter selection	0~65535		0
P16.10	Comparator 3 configuration	0: >; 1: <; 2: ≥; 3: ≤; 4: =; 5: ≈; 6: ≠		0
P16.11	Comparator 3 delay time	0.000~99999.000	s	0.000

P16.12	Comparator 4 input parameter selection	0~65535		0
P16.13	Comparator 4 comparison parameter selection	0~65535		0
P16.14	Comparator 4 configuration	0: >; 1: <; 2: ⩾; 3: ⩽; 4: =; 5: ≈; 6: ≠		0
P16.15	Comparator 4 delay time	0.000~99999.000	s	0.000
P16.16	Comparator 5 input parameter selection	0~65535		0
P16.17	Comparator 5 comparison parameter selection	0~65535		0
P16.18	Comparator 5 configuration	0: >; 1: <; 2: ⩾; 3: ⩽; 4: =; 5: ≈; 6: ≠		0
P16.19	Comparator 5 delay time	0.000~99999.000	s	0.000
P16.20	Comparator 6 input parameter selection	0~65535		0
P16.21	Comparator 6 comparison parameter selection	0~65535		0
P16.22	Comparator 6 configuration	0: >; 1: <; 2: ⩾; 3: ⩽; 4: =; 5: ≈; 6: ≠		0
P16.23	Comparator 6 delay time	0.000~99999.000	s	0.000
P16.24	Comparator 7 input parameter selection	0~65535		0
P16.25	Comparator 7 comparison parameter selection	0~65535		0
P16.26	Comparator 7 configuration	0: >; 1: <; 2: ⩾; 3: ⩽; 4: =; 5: ≈; 6: ≠		0
P16.27	Comparator 7 delay time	0.000~99999.000	s	0.000
P16.28	Comparator 8 input parameter selection	0~65535		0
P16.29	Comparator 8 comparison parameter selection	0~65535		0
P16.30	Comparator 8 configuration	0: >; 1: <; 2: ⩾; 3: ⩽; 4: =; 5: ≈; 6: ≠		0

P16.31	Comparator 8 delay time	0.000~99999.000	s	0.000
P16.32	Comparator 9 input parameter selection	0~65535		0
P16.33	Comparator 9 comparison parameter selection	0~65535		0
P16.34	Comparator 9 configuration	0: >; 1: <; 2: ⩾; 3: ⩽; 4: =; 5: ≈; 6: ≠		0
P16.35	Comparator 9 delay time	0.000~99999.000	s	0.000

■ Function: Set comparison operation

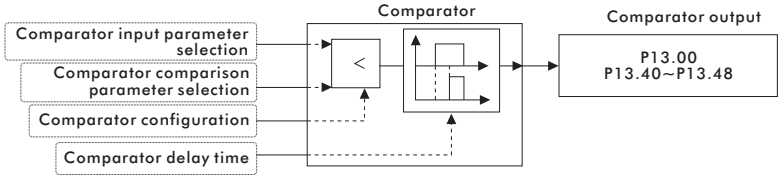

Figure 6-14-1 Comparator

- Comparator input parameter selection: this setting is the address.
  The address is the selected parameter number, and the actual value is determined by the current value of the selected parameter number.
- Comparator comparison parameter selection: this setting is the address.
  The address is the selected parameter number, and the actual value is determined by the current value of the selected parameter number.
- Comparator configuration: select the comparison relationship.
- Comparator delay time: After the delay time is reached, the comparator result is output.

Parameter number	Function	Setting range	Unit	Factory Value
P16.36	Logic unit 1 parameter selection 1	0~65535		0
P16.37	Logic unit 1 input bit selection 1	0~32		0
P16.38	Logic unit 1 parameter selection 2	0~65535		0
P16.39	Logic unit 1 input bit selection 2	0~32		0
P16.40	Logic unit 1 parameter selection 3	0~65535		0
P16.41	Logic unit 1 input bit selection 3	0~32		0
P16.42	Logical unit 1 configuration 1	0: No effect; 1: And; 2: OR; 3: NAND; 4: NOR; 5: XOR		0
P16.43	Logical unit 1 configuration 2	0: No effect; 1: And; 2: OR; 3: NAND; 4: NOR; 5: XOR		0
P16.44	Logic unit 2 parameter selection 1	0~65535		0
P16.45	Logic unit 2 input bit selection 1	0~32		0
P16.46	Logic unit 2 parameter selection 2	0~65535		0
P16.47	Logic unit 2 input bit selection 2	0~32		0
P16.48	Logic unit 2 parameter selection 3	0~65535		0
P16.49	Logic unit 2 input bit selection 3	0~32		0
P16.50	Logical unit 2 configuration 1	0: No effect; 1: And; 2: OR; 3: NAND; 4: NOR; 5: XOR		0
P16.51	Logical unit 2 configuration 2	0: No effect; 1: And; 2: OR; 3: NAND; 4: NOR; 5: XOR		0

■ Function: Set logic function

➢ Logic unit parameter selection: this setting is the address.
The address is the selected parameter number, and the actual value is determined by the current value of the selected parameter number.

➢ Logic unit input bit selection: select the bit selection of logic operation parameters, 0 means bit0, 1 means bit1 ...

➢ Logic unit configuration 1: configure logical operation of logic unit parameters.

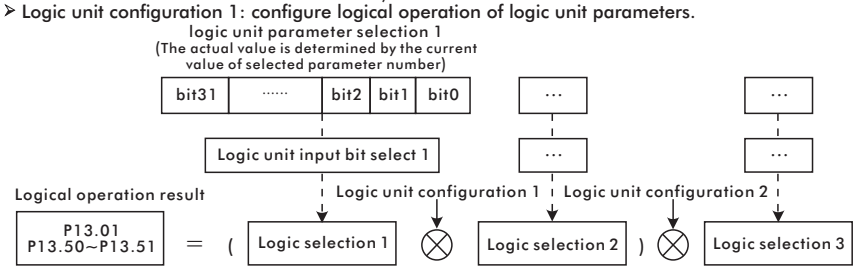

Figure 6-14-2 logic operation

Parameter number	Function	Setting range	Unit	Factory Value
P16.76	Selector 1 parameter source	0~65535		0
P16.77	Selector 1 setting	0~16:numerical setting; 200~65535: address		0
P16.78	Selector 1 destination parameters	0~65535		0
P16.79	Selector 2 parameter source	0~65535		0
P16.80	Selector 2 setting	0~16:numerical setting; 200~65535: address		0
P16.81	Selector 2 destination parameters	0~65535		0
P16.82	Selector 3 parameter source	0~65535		0
P16.83	Selector 3 setting	0~16:numerical setting; 200~65535: address		0
P16.84	Selector 3 destination parameters	0~65535		0
P16.85	Selector 4 parameter source	0~65535		0
P16.86	Selector 4 setting	0~16:numerical setting; 200~65535: address		0
P16.87	Selector 4 destination parameters	0~65535		0
P16.88	Selector 5 parameter source	0~65535		0
P16.89	Selector 5 setting	0~16:numerical setting; 200~65535: address		0
P16.90	Selector 5 destination parameters	0~65535		0
P16.91	Selector 6 parameter source	0~65535		0
P16.92	Selector 6 setting	0~16:numerical setting; 200~65535: address		0
P16.93	Selector 6 destination parameters	0~65535		0
P16.94	Selector 7 parameter source	0~65535		0
P16.95	Selector 7 setting	0~16:numerical setting; 200~65535: address		0
P16.96	Selector 7 destination parameters	0~65535		0
P16.97	Selector 8 parameter source	0~65535		0
P16.98	Selector 8 setting	0~16:numerical setting; 200~65535: address		0
P16.99	Selector 8 destination parameters	0~65535		0

■ Function: Set comparison operation

➢ Principle explanation:
As shown in figure 6-14-3, when it sets to 0~16, selecting an address from 16 consecutive addresses with the selector parameter source as the first address, and pass the current value of the address to the selector destination parameter.
when it sets to 200~65535 as an address, this address is the selected parameter number, and the actual value is determined by the current value of the selected parameter number.

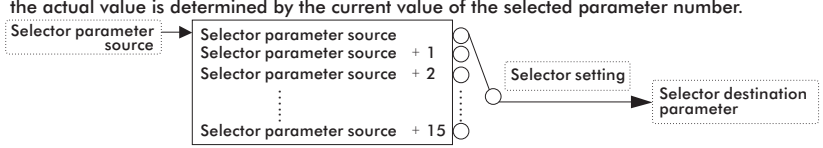

Figure 6-14-3 Selector

For example: P16.76 = 250, P16.78 = 270
When P16.77 = 0, the data of parameter P02.50 is transferred to P02.70;
When P16.77 = 1, the data of parameter P02.51 is transferred to P02.70;
When P16.77 = 2, the data of parameter P02.52 is transferred to P02.70;
.....
When P16.77 = 13, the data of parameter P02.63 is transferred to P02.70;
When P16.77 = 14, the data of parameter P02.64 is transferred to P02.70;
When P16.77 = 15, the data of parameter P02.65 is transferred to P02.70;

6.15 Group 17 parameters: mathematical operations

Parameter number	Function	Setting range	Unit	Factory Value
P17.00	Linear transformation 1 parameter source	0~65535		0
P17.01	Linear transformation 1 X1	-999999.000~999999.000		0.000
P17.02	Linear transformation 1 X2	-999999.000~999999.000		50.000
P17.03	Linear transformation 1 Y1	-999999.000~999999.000		0.000
P17.04	Linear transformation 1 Y2	-999999.000~999999.000		1500.000
P17.05	Linear transformation 2 parameter source	0~65535		0
P17.06	Linear transformation 2 X1	-999999.000~999999.000		0.000
P17.07	Linear transformation 2 X2	-999999.000~999999.000		0.000
P17.08	Linear transformation 2 Y1	-999999.000~999999.000		0.000
P17.09	Linear transformation 2 Y2	-999999.000~999999.000		0.000

■ Function: Set linear transformation operation

➢ Principle explanation:
As shown in Figure 6-15-1, the source parameter of the linear transformation parameter is set, and the current value of the reference parameter is used as the x input. Linear relationship setting (modify parameters P17.01-17.04 or parameters P17.05-P17.09).

➢ Example: Different output frequencies correspond to different speeds
(0~50Hz corresponds to 0~1500rpm),
the setting parameters are as follows:

P17.00 = 1021 (source of linear transformation 1 parameter is output frequency)
P17.01 = 0 (linear transformation 1 X1 is 0)
P17.02 = 50 (linear transformation 1 X2 is 50)
P17.03 = 0 (linear transformation 1 Y1 is 0)
P17.04 = 1500 (linear transformation 1 Y2 is 1500)
P13.02 = Linear transformation 1 result

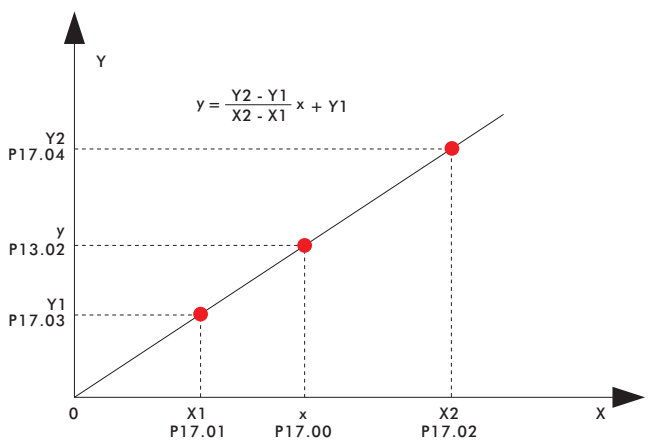

Figure 6-15-1 Linear transformation

Parameter number	Function	Setting range	Unit	Factory Value
P17.16	Single arithmetic operation 1 parameter source	0~65535		0
P17.17	Single arithmetic operation 1 operation setting	0: ABS; 1: Sqrt; 2: Sin; 3: Cos; 4: Power2; 5: Power3; 6: Random; 7: Bitwise NOT; 8: 2 to the n; 10: If less than 0, it means 0. If greater than 0, unchange; 11: If greater than 0, it means 0. If less than 0, unchange		0
P17.18	Single arithmetic operation 2 parameter source	0~65535		0
P17.19	Single arithmetic operation 2 operation setting	0: ABS; 1: Sqrt; 2: Sin; 3: Cos; 4: Power2; 5: Power3; 6: Random; 7: Bitwise NOT; 8: 2 to the n; 10: If less than 0, it means 0. If greater than 0, unchange; 11: If greater than 0, it means 0. If less than 0, unchange		0
P17.20	Single arithmetic operation 3 parameter source	0~65535		0
P17.21	Single arithmetic operation 3 operation setting	0: ABS; 1: Sqrt; 2: Sin; 3: Cos; 4: Power2; 5: Power3; 6: Random; 7: Bitwise NOT; 8: 2 to the n; 10: If less than 0, it means 0. If greater than 0, unchange; 11: If greater than 0, it means 0. If less than 0, unchange		0
P17.22	Single arithmetic operation 4 parameter source	0~65535		0
P17.23	Single arithmetic operation 4 operation setting	0: ABS; 1: Sqrt; 2: Sin; 3: Cos; 4: Power2; 5: Power3; 6: Random; 7: Bitwise NOT; 8: 2 to the n; 10: If less than 0, it means 0. If greater than 0, unchange; 11: If greater than 0, it means 0. If less than 0, unchange		0
P17.24	Single arithmetic operation 5 parameter source	0~65535		0
P17.25	Single arithmetic operation 5 operation setting	0: ABS; 1: Sqrt; 2: Sin; 3: Cos; 4: Power2; 5: Power3; 6: Random; 7: Bitwise NOT; 8: 2 to the n; 10: If less than 0, it means 0. If greater than 0, unchange; 11: If greater than 0, it means 0. If less than 0, unchange		0

■ Function: Set single arithmetic operation

➢ For example: P17.16=1200, P17.17=4, when P12.00=9.000, P13.10=81.000

Parameter number	Function	Setting range	Unit	Factory Value
P17.26	Mathematical operation 1 Parameter source 1	0~65535		0
P17.27	Mathematical operation 1 Parameter source 2	0~65535		0
P17.28	Mathematical operation 1 Parameter source 3	0~65535		0
P17.29	Math operation 1 Operation setting 1	0:No effect; 1:+; 2:-; 3:*; 4:/; 5:Max; 6:Min; 7:Mean; 9:Bitwise AND; 10:Bitwise OR; 11:ANDN; 15:Edge signal source :(P17.29=15, detect the rising edge of P17.26 source, P17.30=15, when the result of P17.27 and P17.28 is not 0 by bitwise, resetting the rising edge) 16:Rearrange the values and increase 8 bits		0
P17.30	Math operation 1 Operation setting 2	0:No effect; 1:+; 2:-; 3:*; 4:/; 5:Max; 6:Min; 7:Mean; 9:Bitwise AND; 10:Bitwise OR; 11:ANDN; 15: Edge signal reset:(P17.29=15, detect the rising edge of P17.26 source, P17.30=15, when the result of P17.27 and P17.28 is not 0 by bitwise, resetting the rising edge) 16: Rearrange the values and decrease 8 bits		0
P17.31	Mathematical operation 2 Parameter source 1	0~65535		0
P17.32	Mathematical operation 2 Parameter source 2	0~65535		0
P17.33	Mathematical operation 2 Parameter source 3	0~65535		0
P17.34	Math operation 2 Operation setting 1	0:No effect; 1:+; 2:-; 3:*; 4:/; 5:Max; 6:Min; 7:Mean; 9:Bitwise AND; 10:Bitwise OR; 11:ANDN; 15:Edge signal source :(P17.29=15, detect the rising edge of P17.26 source, P17.30=15, when the result of P17.27 and P17.28 is not 0 by bitwise, resetting the rising edge) 16:Rearrange the values and increase 8 bits		0

P17.35	Math operation 2 Operation setting 2	0:No effect; 1:+; 2:-; 3:*; 4:/; 5:Max; 6:Min; 7:Mean; 9:Bitwise AND; 10:Bitwise OR; 11:ANDN; 15: Edge signal reset:(P17.29=15, detect the rising edge of P17.26 source, P17.30=15, when the result of P17.27 and P17.28 is not 0 by bitwise, resetting the rising edge) 16: Rearrange the values and decrease 8 bits		0
P17.36	Mathematical operation 3 Parameter source 1	0~65535		0
P17.37	Mathematical operation 3 Parameter source 2	0~65535		0
P17.38	Mathematical operation 3 Parameter source 3	0~65535		0
P17.39	Math operation 3 Operation setting 1	0:No effect; 1:+; 2:-; 3:*; 4:/; 5:Max; 6:Min; 7:Mean; 9:Bitwise AND; 10:Bitwise OR; 11:ANDN; 15:Edge signal source :(P17.29=15, detect the rising edge of P17.26 source, P17.30=15, when the result of P17.27 and P17.28 is not 0 by bitwise, resetting the rising edge) 16:Rearrange the values and increase 8 bits		0
P17.40	Math operation 3 Operation setting 2	0:No effect; 1:+; 2:-; 3:*; 4:/; 5:Max; 6:Min; 7:Mean; 9:Bitwise AND; 10:Bitwise OR; 11:ANDN; 15: Edge signal reset:(P17.29=15, detect the rising edge of P17.26 source, P17.30=15, when the result of P17.27 and P17.28 is not 0 by bitwise, resetting the rising edge) 16: Rearrange the values and decrease 8 bits		0
P17.41	Mathematical operation 4 Parameter source 1	0~65535		0
P17.42	Mathematical operation 4 Parameter source 2	0~65535		0
P17.43	Mathematical operation 4 Parameter source 3	0~65535		0

P17.44	Math operation 4 Operation setting 1	0:No effect; 1:+; 2:-; 3:*; 4:/; 5:Max; 6:Min; 7:Mean; 9:Bitwise AND; 10:Bitwise OR; 11:ANDN; 15:Edge signal source :(P17.29=15, detect the rising edge of P17.26 source, P17.30=15, when the result of P17.27 and P17.28 is not 0 by bitwise, resetting the rising edge) 16:Rearrange the values and increase 8 bits		0
P17.45	Math operation 4 Operation setting 2	0:No effect; 1:+; 2:-; 3:*; 4:/; 5:Max; 6:Min; 7:Mean; 9:Bitwise AND; 10:Bitwise OR; 11:ANDN; 15: Edge signal reset:(P17.29=15, detect the rising edge of P17.26 source, P17.30=15, when the result of P17.27 and P17.28 is not 0 by bitwise, resetting the rising edge) 16: Rearrange the values and decrease 8 bits		0

■ Function: Set up math operation

➢ Source of mathematical operation parameters:
this setting is the address. The address is the selected parameter number, and the actual value is determined by the current value of the selected parameter number.

➢ Math operation setting: set math operation.

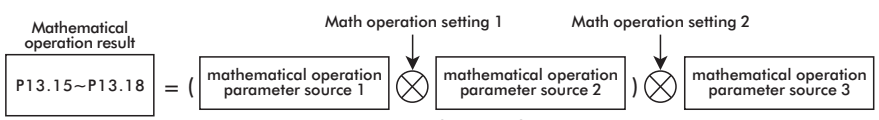

Figure 6-15-2 mathematical operation

For example: P17.26 = 1201, P17.27 = 1202, P17.28 = 1203, P17.29 = 1, P17.30 = 3
When P12.01 = 2.000, P12.02 = 3.000, P12.03 = 5.000,
the calculation result P13.15 = (2.000 + 3.000) * 5.000 = 25.000

➢ Edge signal .
For example: When the output frequency reaches 50Hz, the relay pulls in. When the output frequency is less than 50Hz, the relay keeps pull in. Only when the inverter stops, the relay will disconnect.

Parameter number	Function	Setting Value
P03.00	Start command source	3
P03.30	Y1 terminal source	1341
P12.00	Free parameter 1	50
P12.01	Free parameter 2	1
P12.02	Free parameter 3	0.001
P16.00	Comparator 1 input parameter	1020
P16.01	Comparator 1 comparison parameter	1200
P16.02	Comparator 1 configuration	4

P16.04	Comparator 2 input parameter	1315
P16.05	Comparator 2 comparison parameter	1202
P16.06	Comparator 2 configuration	4
P16.36	Logic unit 1 parameter selection 1	1070
P16.37	Logic unit 1 input bit selection 1	0
P16.38	Logic unit 1 parameter selection 2	1201
P16.39	Logic unit 1 input bit selection 2	0
P16.42	Logical unit 1 configuration 1	5
P17.26	Mathematical operation 1 parameter source 1	1340
P17.27	Mathematical operation 1 parameter source 2	1350
P17.28	Mathematical operation 1 parameter source 3	1201
P17.29	Math operation 1 operation setting 1	15
P17.30	Math operation 1 operation setting 2	15

6.16 Group 18 parameters: timing control

Parameter number	Function	Setting range	Unit	Factory Value
P18.00	Timer 1 clock source	0:1ms; 1:10ms; 2:100ms; 3:1s; 6:1h; 7:1day; 11~26: from S1 ~ S16, when S terminal is the rising edge, count plus 1; 27~42: from the 0~15 bits of virtual terminal P01.30, when the corresponding bit is the rising edge, count plus 1; 51~76: from S1~S16, when S terminal is the falling edge, count plus 1; 77~92: from the 0~15 bits of virtual terminal P01.30, when the corresponding bit is the falling edge, count plus 1; 200~3799: address		0
P18.01	Timer 1 working mode	0: Stop at the end of a single run; 1 ~ 16: Set the start of the next cycle At the end of a single operation, the cycle starts automatically from the setting		0
P18.02	Timer 1 control command	bit0: Enable; bit1: Start counting; bit2: Pause counting; bit3: Clear counting		0
P18.03	Timer 1 set value	-1~4294967295		-1
P18.04	Timer 1 phase 1 time	0~4294967295		0
P18.05	Timer 1 phase 2 time	0~4294967295		0
P18.06	Timer 1 phase 3 time	0~4294967295		0
P18.07	Timer 1 phase 4 time	0~4294967295		0
P18.08	Timer 1 phase 5 time	0~4294967295		0
P18.09	Timer 1 phase 6 time	0~4294967295		0
P18.10	Timer 1 phase 7 time	0~4294967295		0
P18.11	Timer 1 phase 8 time	0~4294967295		0
P18.12	Timer 1 phase 9 time	0~4294967295		0
P18.13	Timer 1 phase 10 time	0~4294967295		0
P18.14	Timer 1 phase 11 time	0~4294967295		0
P18.15	Timer 1 phase 12 time	0~4294967295		0
P18.16	Timer 1 phase 13 time	0~4294967295		0
P18.17	Timer 1 phase 14 time	0~4294967295		0

P18.18	Timer 1 phase 15 time	0~4294967295		0
P18.19	Timer 1 phase 16 time	0~4294967295		0
P18.20	Timer 2 clock source	0:1ms; 1:10ms; 2:100ms; 3:1s; 6:1h; 7:1day; 11~26: from S1 ~ S16, when S terminal is the rising edge, count plus 1; 27~42: from the 0~15 bits of virtual terminal P01.30, when the corresponding bit is the rising edge, count plus 1; 51~76: from S1~S16, when S terminal is the falling edge, count plus 1; 77~92: from the 0~15 bits of virtual terminal P01.30, when the corresponding bit is the falling edge, count plus 1; 200~3799: address		0
P18.21	Timer 2 working mode	0: Stop at the end of a single run; 1 ~ 16: Set the start of the next cycle At the end of a single operation, the cycle starts automatically from the setting		0
P18.22	Timer 2 control command	bit0: Enable; bit1: Start counting; bit2: Pause counting; bit3: Clear counting		0
P18.23	Timer 2 set value	-1~4294967295		-1
P18.24	Timer 2 phase 1 time	0~4294967295		0
P18.25	Timer 2 phase 2 time	0~4294967295		0
P18.26	Timer 2 phase 3 time	0~4294967295		0
P18.27	Timer 2 phase 4 time	0~4294967295		0
P18.28	Timer 2 phase 5 time	0~4294967295		0
P18.29	Timer 2 phase 6 time	0~4294967295		0
P18.30	Timer 2 phase 7 time	0~4294967295		0
P18.31	Timer 2 phase 8 time	0~4294967295		0
P18.32	Timer 2 phase 9 time	0~4294967295		0
P18.33	Timer 2 phase 10 time	0~4294967295		0
P18.34	Timer 2 phase 11 time	0~4294967295		0
P18.35	Timer 2 phase 12 time	0~4294967295		0
P18.36	Timer 2 phase 13 time	0~4294967295		0
P18.37	Timer 2 phase 14 time	0~4294967295		0
P18.38	Timer 2 phase 15 time	0~4294967295		0
P18.39	Timer 2 phase 16 time	0~4294967295		0

■ Function: Set timer parameters

- Timer clock source: Set the timer clock source.
  Set to 0 ~ 199, this setting is to select a specific time interval,
  Set to 200 ~ 3799, this setting is the address.
  The address is the selected parameter number, and the actual value is determined by the current value of the selected parameter number.
- Timer working mode: set to 0, it will not cycle after the end of a single run; set to N (1≦N≦16), after the end of a single run, it will automatically start to cycle from N until the timer is not enabled
- Timer control commands: bit0: enable; bit1: start counting, rising edge signal enable; bit2: pause counting; bit3: clear counting.
- Timer setting value: Set the timer count value.
- Timer phase time: set the timer duration of each phase of the timer.

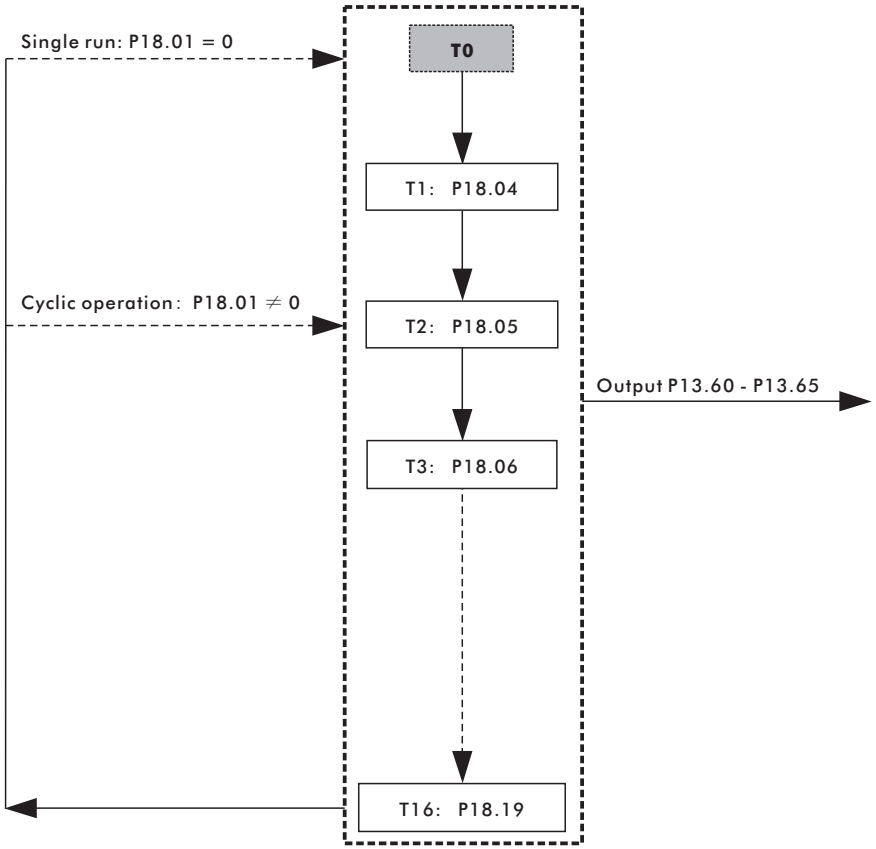

Figure 6-16-1 Timing control

CHAPTER 7 - The examples for macro of application

7.1 Multi-speed control operation

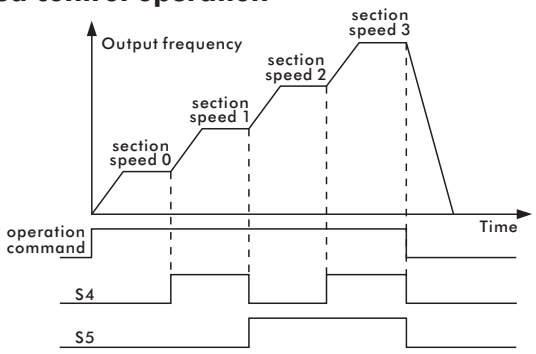

Figure 7-1 Multi-speed selection

- Example: The external terminals S4 and S5 control the four-stage speed switching, and the multi-stage speeds are set to 10HZ, 15HZ, 20HZ, 25HZ respectively.
  Step 1: Set P01.20 to 31, select multi-stage speed macro;
  Step 2: Set P03.00 to 3, select external terminal S1 to control start.

7.2 The internal control with eight periods of speed

- Example: timing control of eight-stage speed switching, setting multi-stage speeds as 5HZ, 10HZ, 15HZ, 20HZ, 25HZ, 30HZ, 35HZ, 40HZ; external terminal S4 controls multi-stage speed enable, S1 controls motor running.
  Step 1: Set P01.20 to 68, select the internal control eight-stage speed macro;
  Step 2: Set P03.00 to 3, select external terminal S1 to control start.
- Example: Timing control of eight-stage speed switching, setting multi-stage speeds as 5HZ, 10HZ, 15HZ, 20HZ, 25HZ, 30HZ, 35HZ, 40HZ; external terminal S4 controls multi-stage speed enable and motor start.
  Step 1: Set P01.20 to 68, select the internal control eight-stage speed macro;
  Step 2: Set P03.00 to 6, select external terminal S4 to control start.

7.3 PID control operation

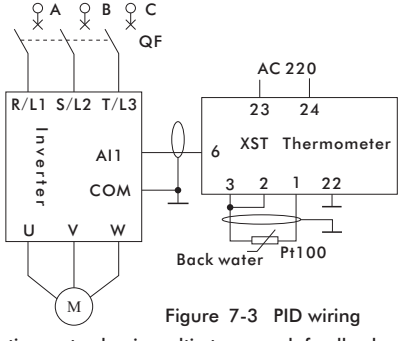

Figure 7-3 PID wiring

- Example: PID control operation, set value is multi-step speed, feedback uses AI1, external terminal S1 controls start and stop.
  Step 1: Set P01.20 to 32, select PID macro 1;
  Step 2: Set P01.39 to 0, the command source setting selects single command source mode;
  Step 3: Set P03.00 to 3 and select S1 as the source of the start command.
- Example: PID control operation, set value is AI2, feedback uses AI1, external terminal S1 controls start and stop.
  Step 1: Set P01.20 to 33, select PID Macro 2;
- Step 2: Set P01.39 to 0, the command source setting selects single command source mode;
- Step 3: Set P03.00 to 3 and select S1 as the source of the start command.

CHAPTER 8 - Application Macro

No.	Name	S1	S2	S3	S4	S5	Y1	Y2	Y3	AI1	AI2	AO1	AO2	Keyboard	Communication
0~9	User Macro 1~10	x	x	x	x	x	x	x	x	x	x	x	x	x	x
10	Comprehensive Macro 1	start up	Reverse start	JOG	Segment speed selection	Segment speed selection	Running	Fault	Alarm	Set value	x	Output frequency	Output current	Start and stop	Start/stop/ setting value
11	Comprehensive Macro 2	start up	Forward and reverse	JOG	Segment speed selection	Segment speed selection	Running	Fault	Alarm	Set value	x	Output frequency	Output current	Start and stop	Start/stop/ setting value
12	Comprehensive Macro 3	start up	Stop	Forward and reverse	Segment speed selection	Segment speed selection	Running	Fault	Alarm	Set value	x	Output frequency	Output current	Start and stop	Start/stop/ setting value
13	Comprehensive Macro 4	start up	Stop	JOG	x	x	Running	Fault	Alarm	Feedback value	Set value	Output frequency	Output current	Start and stop	Start and stop
20	1-line command macro	start up	x	x	x	x	x	x	x	x	x	x	x	Start and stop	Start/stop/ setting value
21	2-line command macro 1	start up	Reverse start	x	x	x	x	x	x	x	x	x	x	Start and stop	Start/stop/ setting value
22	2-line command macro 2	start up	Forward and reverse	x	x	x	x	x	x	x	x	x	x	Start and stop	Start/stop/ setting value
23	3-line command macro 1	start up	Reverse start	Stop	x	x	x	x	x	x	x	x	x	Start and stop	Start/stop/ setting value
24	3-line command macro 2	start up	Forward and reverse	Stop	x	x	x	x	x	x	x	x	x	Start and stop	Start/stop/ setting value
30	Main and auxiliary settings	x	x	x	x	x	x	x	x	Set value	x	x	x	x	Set value
31	Multi-stage speed macro	x	x	x	Segment speed selection	Segment speed selection	x	x	x	x	x	x	x	x	x
32	PID Macro 1	x	x	x	x	x	x	x	x	Feedback value	x	x	x	x	x
33	PID Macro 2	x	x	x	x	x	x	x	x	Feedback value	Set value	x	x	x	x
50	Speed Start macro	x	x	x	x	x	x	x	x	x	x	x	x	x	x
51	DC injection macro	x	x	x	x	x	x	x	x	x	x	x	x	x	x
52	Free parking macro	x	x	x	x	x	x	x	x	x	x	x	x	x	x
53	DC brake macro	x	x	x	x	x	x	x	x	x	x	x	x	x	x
54	Emergency acceleration macro	x	x	x	x	x	x	x	x	x	x	x	x	x	x
55	Emergency deceleration macro	x	x	x	x	x	x	x	x	x	x	x	x	x	x
60	Console switch macro	x	x	x	Segment speed selection	Segment speed selection	x	x	x	x	x	x	x	Set value	x
61	Frequency reach macro	x	x	x	x	x	Frequency reach	x	x	x	x	x	x	x	x
62	FDT macro	x	x	x	x	x	Frequency reach range	x	x	x	x	x	x	x	x
63	Acceleration and deceleration switching	x	x	x	x	x	x	x	x	x	x	x	x	x	x
64	Brake signal macro	x	x	x	x	x	Frequency too low	x	x	x	x	x	x	x	x
65	Release signal macro	x	x	x	x	x	Frequency reached and the current is too large	x	x	x	x	x	x	x	x
66	Break detection macro	x	x	x	x	x	Frequency reached and the current is too small	x	x	x	x	x	x	x	x
67	Signal loss macro	x	x	x	x	x	Detection signal is less than the threshold	x	x	x	x	x	x	x	x
68	Internal control eight-stage speed macro	x	x	x	Segment speed selection		x	x	x	x	x	x	x	x	x

Note: restore factory value before changing application macro!

8.1 Comprehensive Macro 1

Comprehensive Macro 1 (P01.20=10)

Multi-command source, multi-set value given mode, analog and digital output.

- Set frequency: main frequency AI1 + auxiliary frequency (multi-speed + communication).
- If JOG command is valid, run JOG frequency.
- Command source: start and stop, reverse start, JOG command.
- Use analog quantity AI1, AO1, AO2, external terminals S1 ~ S5.

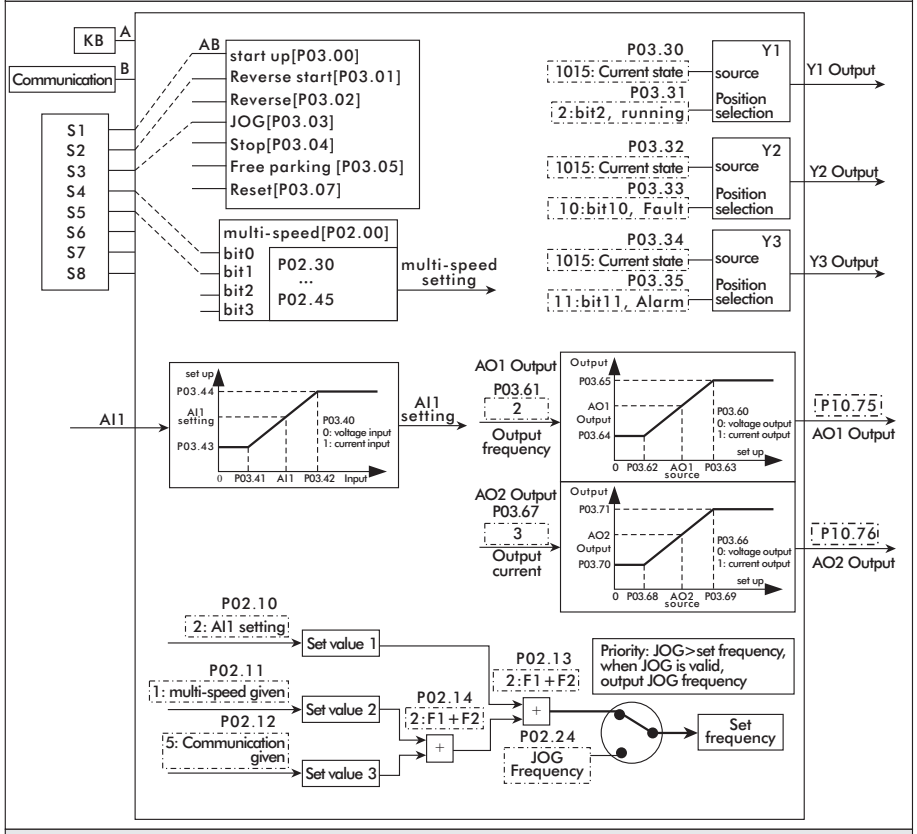

Parameter No.	Function	Setting value	Note
P02.24	JOG Frequency	10	JOG frequency is set to 5Hz
P02.30	Multi-speed 0	20	Auxiliary frequency multi-speed 0 is set to 10Hz
P02.31	Multi-speed 1	30	Auxiliary frequency multi-speed 1 is set to 15Hz
P02.32	Multi-speed 2	40	Auxiliary frequency multi-speed 2 is set to 20Hz
P02.33	Multi-speed 3	50	Auxiliary frequency multi-speed 3 is set to 25Hz
P03.61	AO1 signal source	2	Output frequency
P03.67	AO2 signal source	3	Output current

P03.40	AI1 signal type	0	AI1 signal type is voltage signal
P03.41	AI1 low-end voltage (current)	0.050	0.050V corresponds to 0Hz
P03.42	AI1 high-end voltage (current)	10.000	10.000V corresponds to 50Hz
P03.43	AI1 low-end setting	0.000	AI1 low-end setting
P03.44	AI1 high-end setting	100.000	AI1 high-end setting
P03.60	AO1 signal type	0	AO1 signal type is voltage signal
P03.62	AO1 low-end setting	0.000	AO1 low-end setting
P03.63	AO1 high-end setting	50.000	AO1 high-end setting
P03.64	AO1 low-end voltage (current)	0.000	0.000V corresponds to 0Hz
P03.65	AO1 high-end voltage (current)	10.000	10.000V corresponds to 50Hz
P03.66	AO2 signal type	0	AO2 signal type is voltage signal
P03.68	AO2 low-end setting	0.000	AO2 low-end setting
P03.69	AO2 high-end setting	50.000	AO2 high-end setting
P03.70	AO2 low-end voltage (current)	0.000	0.000V corresponds to 0Hz
P03.71	AO2 high-end voltage (current)	10.000	10.000V corresponds to 50Hz
P01.39	Command mode	1	Multi-command source
P02.00	Multi-speed source	11000	Multi-speed selection for external terminals S4, S5
P02.10	Set value source 1	2	Set value source 1 select AI1
P02.11	Set value source 2	1	Set value source 2 select multi-speed
P02.12	Set value source 3	5	Set value source 3 is communication
P02.13	Set channel 1 relationship selection	2	Set the channel 1 relationship selection to F1 + F2
P02.14	Set channel 2 relationship selection	2	Set the channel 2 relationship selection to F1 + F2
P03.00	Start command source	7	Start command to select keyboard, communication, external terminal S1
P03.01	Reverse start command source	8	Reverse start command is selected as external terminal S2
P03.03	JOG command source	16	JOG command is selected as external terminal S3
P03.30	Y1 terminal source	3	Relay 1 comes from the current state is running
P03.32	Y2 terminal source	4	Relay 2 comes from current state fault
P03.34	Y3 terminal source	5	Relay 3 comes from the current state alarm

8.2 Comprehensive Macro 2

Comprehensive Macro 2 (P01.20=11)

Multi-command source, the mode how multi-set value is given, analog and digital output.

- Set frequency: The main frequency AI1 + auxiliary frequency (multi-stage speed + communication) is given.
- If JOG command is valid, run JOG frequency.
- Command source: start and stop, forward and reverse, JOG command.
- Use analog quantity AI1, AO1, AO2, external terminals S1 ~ S5.

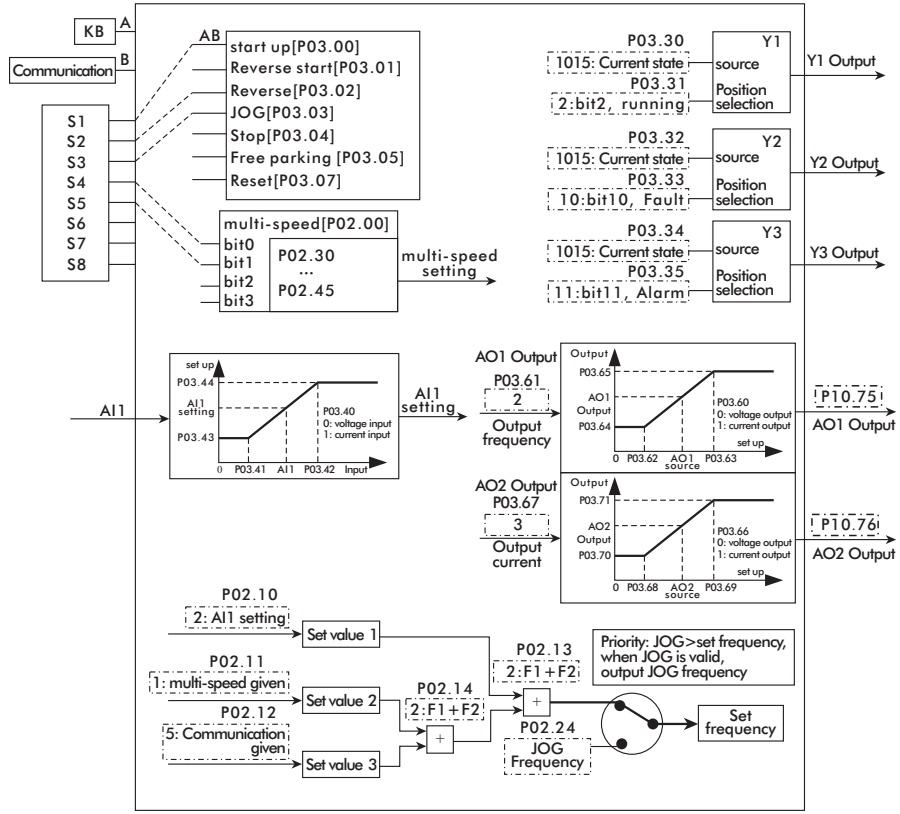

Parameter No.	Function	Setting value	Note
P02.24	JOG Frequency	10	JOG frequency is set to 5Hz
P02.30	Multi-speed 0	20	Auxiliary frequency multi-speed 0 is set to 10Hz
P02.31	Multi-speed 1	30	Auxiliary frequency multi-speed 1 is set to 15Hz
P02.32	Multi-speed 2	40	Auxiliary frequency multi-speed 2 is set to 20Hz
P02.33	Multi-speed 3	50	Auxiliary frequency multi-speed 3 is set to 25Hz

P03.61	AO1 signal source	2	Output frequency
P03.67	AO2 signal source	3	Output current
P03.40	AI1 signal type	0	AI1 signal type is voltage signal
P03.41	AI1 low-end voltage (current)	0.050	0.050V corresponds to 0Hz
P03.42	AI1 high-end voltage (current)	10.000	10.000V corresponds to 50Hz
P03.43	AI1 low-end setting	0.000	AI1 low-end setting
P03.44	AI1 high-end setting	100.000	AI1 high-end setting
P03.60	AO1 signal type	0	AO1 signal type is voltage signal
P03.62	AO1 low-end setting	0.000	AO1 low-end setting
P03.63	AO1 high-end setting	50.000	AO1 high-end setting
P03.64	AO1 low-end voltage (current)	0.000	0.000V corresponds to 0Hz
P03.65	AO1 high-end voltage (current)	10.000	10.000V corresponds to 50Hz
P03.66	AO2 signal type	0	AO2 signal type is voltage signal
P03.68	AO2 low-end setting	0.000	AO2 low-end setting
P03.69	AO2 high-end setting	50.000	AO2 high-end setting
P03.70	AO2 low-end voltage (current)	0.000	0.000V corresponds to 0Hz
P03.71	AO2 high-end voltage (current)	10.000	10.000V corresponds to 50Hz
P01.39	Command mode	1	Multi-command source mode
P02.00	Multi-speed source	11000	The multi-stage speed is selected as S4, S5
P02.10	Set value source 1	2	Set value source 1 select AI1
P02.11	Set value source 2	1	Set value source 2 select multi-speed
P02.12	Set value source 3	5	Set value source 3 is communication
P02.13	Set channel 1 relationship selection	2	Set the channel 1 relationship selection to F1 + F2
P02.14	Set channel 2 relationship selection	2	Set the channel 2 relationship selection to F1 + F2
P03.00	Start command source	7	Start command to select keyboard, communication, external terminal S1
P03.02	Reverse command source	8	Reverse command is selected as external terminal S3
P03.03	JOG command source	16	JOG command is selected as external terminal S3
P03.30	Y1 terminal source	3	Relay 1 comes from the current state is running
P03.32	Y2 terminal source	4	Relay 2 comes from current state fault
P03.34	Y3 terminal source	5	Relay 3 comes from the current state alarm

8.3 Comprehensive Macro 3

Comprehensive Macro 3 (P01.20=12)

Multi-command source, multi-set value given mode, analog and digital output.

- Set frequency: The main frequency AI1 + auxiliary frequency (multi-stage speed + communication) is given.
- Command source: start stop, stop, forward and reverse.
- Use analog quantity AI1, AO1, AO2, external terminals S1 ~ S5.

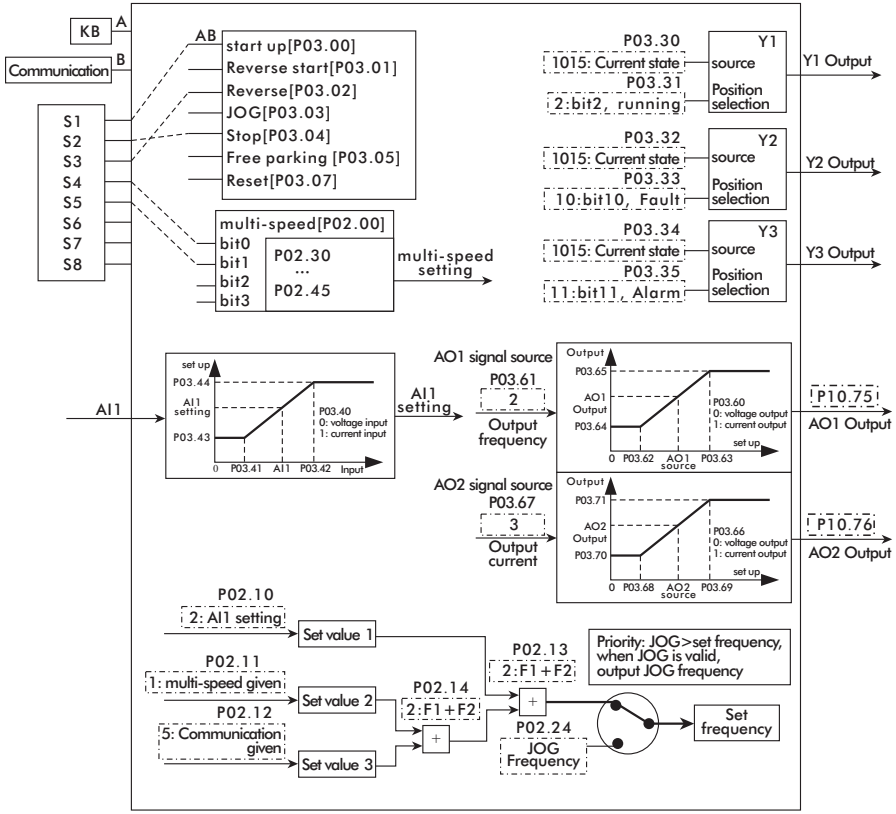

Parameter No.	Function	Setting value	Note
P02.30	Multi-speed 0	20	Auxiliary frequency multi-speed 0 is set to 10Hz
P02.31	Multi-speed 1	30	Auxiliary frequency multi-speed 1 is set to 15Hz
P02.32	Multi-speed 2	40	Auxiliary frequency multi-speed 2 is set to 20Hz
P02.33	Multi-speed 3	50	Auxiliary frequency multi-speed 2 is set to 25Hz

P03.61	AO1 signal source	2	Output frequency
P03.67	AO2 signal source	3	Output current
P03.40	AI1 signal type	0	AI1 signal type is voltage signal
P03.41	AI1 low-end voltage (current)	0.050	0.050V corresponds to 0Hz
P03.42	AI1 high-end voltage (current)	10.000	10.000V corresponds to 50Hz
P03.43	AI1 low-end setting	0.000	AI1 low-end setting
P03.44	AI1 high-end setting	100.000	AI1 high-end setting
P03.60	AO1 signal type	0	AO1 signal type is voltage signal
P03.62	AO1 low-end setting	0.000	AO1 low-end setting
P03.63	AO1 high-end setting	50.000	AO1 high-end setting
P03.64	AO1 low-end voltage (current)	0.000	0.000V corresponds to 0Hz
P03.65	AO1 high-end voltage (current)	10.000	10.000V corresponds to 50Hz
P03.66	AO2 signal type	0	AO2 signal type is voltage signal
P03.68	AO2 low-end setting	0.000	AO2 low-end setting
P03.69	AO2 high-end setting	50.000	AO2 high-end setting
P03.70	AO2 low-end voltage (current)	0.000	0.000V corresponds to 0Hz
P03.71	AO2 high-end voltage (current)	10.000	10.000V corresponds to 50Hz
P01.39	Command mode	1	Multi-command source mode
P02.00	Multi-speed source	11000	Multi-speed selection for external terminals S4, S5
P02.10	Set value source 1	2	Set value source 1 select AI1
P02.11	Set value source 2	1	Set value source 2 select multi-speed
P02.12	Set value source 3	5	Set value source 3 select communication
P02.13	Set channel 1 relationship selection	2	Set the channel 1 relationship selection to F1 + F2
P02.14	Set channel 2 relationship selection	2	Set the channel 2 relationship selection to F1 + F2
P03.00	Start command source	7	Start command to select keyboard, communication, external terminal S1
P03.04	Stop command source	8	Stop command is selected as external terminal S2
P03.02	Reverse command source	16	Reverse command is selected as external terminal S3
P03.30	Y1 terminal source	3	Relay 1 comes from the current state is running
P03.32	Y2 terminal source	4	Relay 2 comes from current state fault
P03.34	Y3 terminal source	5	Relay 3 comes from the current state alarm

8.4 Comprehensive Macro 4

Comprehensive Macro 4(P01.20=13)

Multi-command source, PID main and auxiliary setting value given mode, analog and digital output.

- Set frequency: The main frequency AI2 + auxiliary frequency PID is given. PID setting: multi-step speed, PID feedback: AI1.
- If JOG command is valid, run JOG frequency.
- Command source: start stop, stop, JOG command.
- Use analog AI1, AI2, AO1, AO2, external terminals S1 ~ S3.

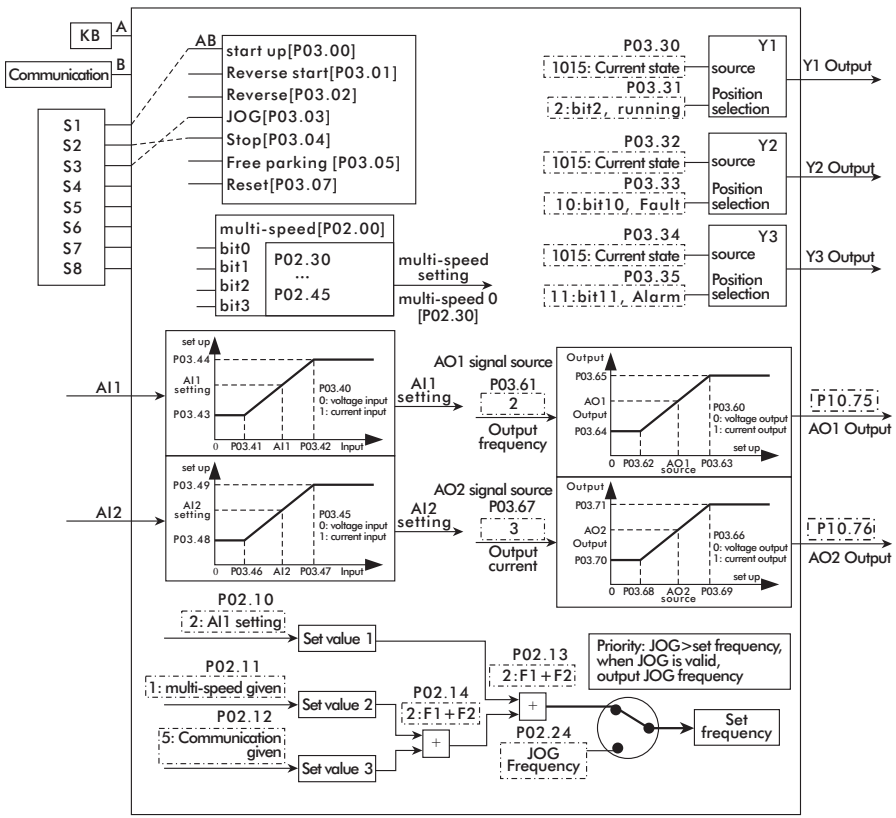

Parameter No.	Function	Setting value	Note
P02.24	JOG Frequency	10	JOG frequency is set to 5Hz
P02.30	Multi-speed 0	20	PID setting is set to 10HZ

P03.61	AO1 signal source	2	Output frequency
P03.67	AO2 signal source	3	Output current
P03.40	AI1 signal type	0	AI1 signal type is voltage signal
P03.41	AI1 low-end voltage (current)	0.050	0.050V corresponds to 0Hz
P03.42	AI1 high-end voltage (current)	10.000	10.000V corresponds to 50Hz
P03.43	AI1 low-end setting	0.000	AI1 low-end setting
P03.44	AI1 high-end setting	100.000	AI1 high-end setting
P03.45	AI2 signal type	0	AI2 signal type is voltage signal
P03.46	AI2 low-end voltage (current)	0.050	0.050V corresponds to 0Hz
P03.47	AI2 high-end voltage (current)	10.000	10.000V corresponds to 50Hz
P03.48	AI2 low-end setting	0.000	AI2 low-end setting
P03.49	Ai2 high-end setting	50.000	AI2 high-end setting
P03.60	AO1 signal type	0	AO1 signal type is voltage signal
P03.62	AO1 low-end setting	0.000	AO1 low-end setting
P03.63	AO1 high-end setting	50.000	AO1 high-end setting
P03.64	AO1 low-end voltage (current)	0.000	0.000V corresponds to 0Hz
P03.65	AO1 high-end voltage (current)	10.000	10.000V corresponds to 50Hz
P03.66	AO2 signal type	0	AO2 signal type is voltage signal
P03.68	AO2 low-end setting	0.000	AO2 low-end setting
P03.69	AO2 high-end setting	50.000	AO2 high-end setting
P03.70	AO2 low-end voltage (current)	0.000	0.000V corresponds to 0Hz
P03.71	AO2 high-end voltage (current)	10.000	10.000V corresponds to 50Hz
P01.39	Command mode	1	Multi-command source mode
P02.00	Multi-speed source	0	Multi-speed selection without external terminals
P02.10	Set value source 1	3	Set value source 1 select AI2
P02.11	Set value source 2	1	Set value source 2 select multi-speed
P02.12	Set value source 3	2	Set value source 3 select AI1
P02.13	Set channel 1 relationship selection	2	Set the channel 1 relationship selection to F1 + F2
P02.14	Set channel 2 relationship selection	8	Set the channel 2 relationship selection to PID
P03.00	Start command source	7	Start command to select keyboard, communication, external terminal S1
P03.04	Stop command source	8	Stop command is selected as external terminal S2
P03.03	JOG command source	16	JOG command is selected as external terminal S3
P03.30	Y1 terminal source	3	Relay 1 comes from the current state is running
P03.32	Y2 terminal source	4	Relay 2 comes from current state fault
P03.34	Y3 terminal source	5	Relay 3 comes from the current state alarm

8.5 1-line command macro

1-line command macro (P01.20=20)

S1 controls start and stop.

- The command source include "start, stop and free stop".
- Use external terminal S1.

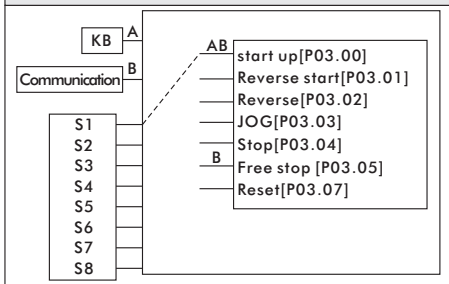

Parameter No.	Function	Setting value	Note
P02.91	Communication commands	0	0 is no command; 1 is start command; 32 is free stop
P01.39	Command mode	1	Multi-command source mode
P03.00	Start command source	7	Start command selection is keyboard, communication, external terminal S1
P03.04	Stop command source	0	No effect
P03.05	Free stop command source	2	Free stop command selection is communication

8.6 2-line command macro 1

2-line command macro 1(P01.20=21)

S1 controls forward, S2 controls reverse.

- The command sources include "start stop, reverse start and free stop".
- Use external terminals S1 ~ S2.

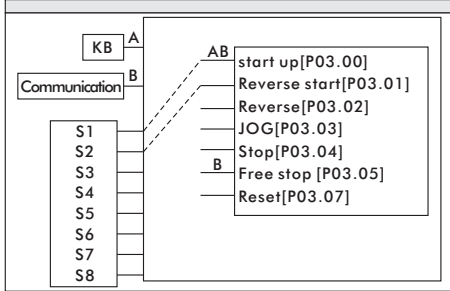

Parameter No.	Function	Setting value	Note
P01.39	Command mode	1	Multi-command source mode
P03.00	Start command source	7	Start command selection is keyboard, communication, external terminal S1
P03.01	Reverse start command source	8	Reverse start command selection is external terminal S2
P03.04	Stop command source	0	No effect
P03.05	Free stop command source	2	Free stop command selection is communication

8.7 2-line command macro 2

2-line command macro 2 (P01.20=22)

S1 controls start and stop, S2 controls direction.

- The command sources include "start stop, forward reverse and free stop".
- Use external terminals S1 ~ S2.

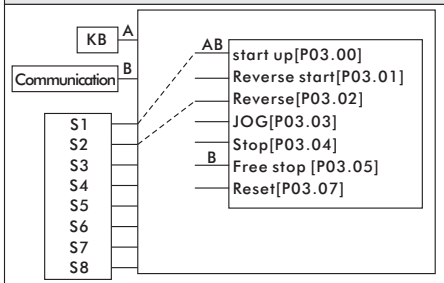

Parameter No.	Function	Setting value	Note
P01.39	Command mode	1	Multi-command source mode
P03.00	Start command source	7	Start command selection is keyboard, communication, external terminal S1
P03.02	Reverse command source	8	Reverse command selection is external terminal S2
P03.04	Stop command source	0	No effect
P03.05	Free stop command source	2	Free stop command selection is communication

8.8 3-line command macro 1

3-line command macro 1 (P01.20=23)

Three-wire system.

- The command sources include "start, reverse start, stop, free stop".
- Use external terminals S1 ~ S3.

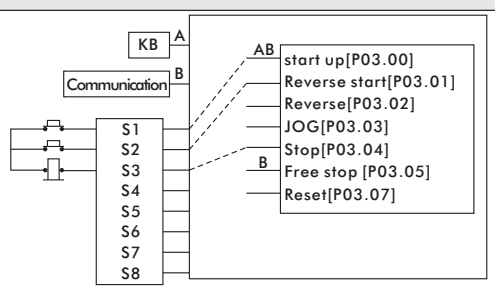

Parameter No.	Function	Setting value	Note
P01.39	Command mode	1	Multi-command source mode
P03.00	Start command source	7	Start command selection is keyboard, communication, external terminal S1
P03.01	Reverse start command source	8	Reverse start command is selected as external terminal S2
P03.04	Source of stop command	16	Stop command is selected as terminal S3
P03.05	Free stop command source	2	Free stop command selection is communication
P03.20	S1 type	2	Trigger on rising edge
P03.21	S2 type	2	Trigger on rising edge
P03.22	S3 type	3	Trigger on falling edge

8.9 3-line command macro 2

3-line command macro 2 (P01.20=24)

Three-wire system.

- The command sources include start, forward and reverse, stop and free stop.
- Use external terminals S1 ~ S3.

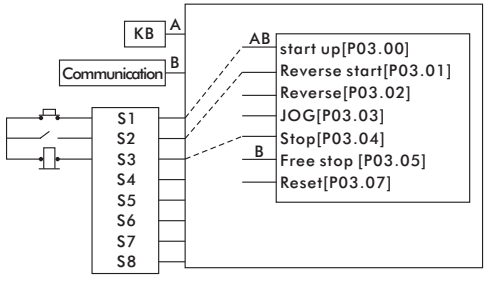

Parameter No.	Function	Setting value	Note
P01.39	Command mode	1	Multi-command source mode
P03.00	Start command source	7	Start command selection is keyboard, communication, external terminal S1
P03.02	Reverse start command source	8	Reverse start command is selected as external terminal S2
P03.04	Stop command source	16	Stop command is selected as terminal S3
P03.05	Free stop command source	2	Free stop command selection is communication
P03.20	S1 type	2	Trigger on rising edge
P03.22	S3 type	3	Trigger on falling edge

External control terminal command macro

8.10 Main and auxiliary settings

Main and auxiliary settings (P01.20=30)

Various setting values are added and given.

- The set frequency is given by the main frequency AI1 + auxiliary frequency (multi-stage speed + communication).
- No command source is given.
- No external terminals are used.

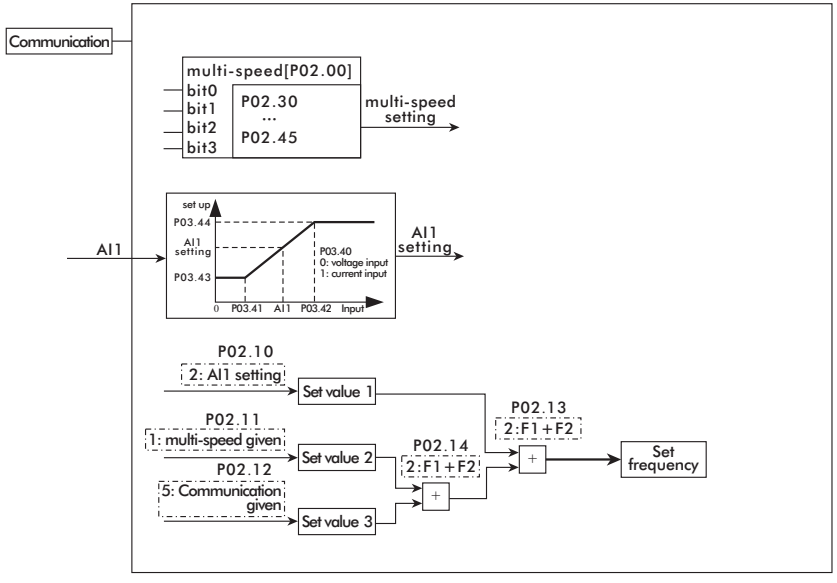

Parameter No.	Function	Setting value	Note
P02.30	Multi-speed 0	20	Auxiliary frequency multi-speed 0 is set to 10Hz
P03.40	AI1 signal type	0	AI1 signal type is voltage signal
P03.41	AI1 low-end voltage (current)	0.050	0.050V corresponds to 0Hz
P03.42	AI1 high-end voltage (current)	10.000	10.000V corresponds to 50Hz
P03.43	AI1 low-end setting	0.000	AI1 low-end setting
P03.44	AI1 high-end setting	100.000	AI1 high-end setting
P02.10	Set value source 1	2	Set value source 1 is AI1
P02.11	Set value source 2	1	Set value source 2 is multi-speed
P02.12	Set value source 3	5	Set value source 3 is communication
P02.13	Set channel 1 relationship selection	2	Set the channel 1 relationship selection to F1 + F2
P02.14	Set channel 2 relationship selection	2	Set the channel 2 relationship selection to F1 + F2
P02.00	Multi-speed source	0	Multi-speed selection without external terminals

Main and auxiliary setting macro

8.11 Multi-stage speed macro

Multi-stage speed macro (P01.20=31)

Externally controlled four-speed.

- The set frequency is given by multi-step speed.
- Use external terminals S4 ~ S5.

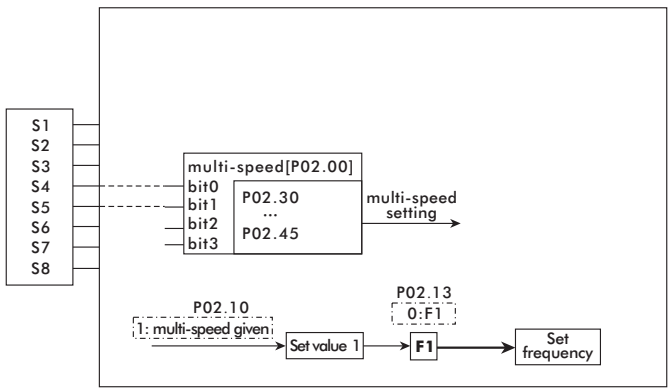

Parameter No.	Function	Setting value	Note
P02.30	Multi-speed 0	20	Multi-speed 0 is set to 10Hz
P02.31	Multi-speed 1	30	Multi-speed 1 is set to 15Hz
P02.32	Multi-speed 2	40	Multi-speed 2 is set to 20Hz
P02.33	Multi-speed 3	50	Multi-speed 3 is set to 25Hz
P02.10	Set value source 1	1	Set value source 1 is multi-speed
P02.13	Set channel 1 relationship selection	1	Set the channel 1 relationship selection to F2
P02.00	Multi-speed source	11000	Multi-speed selection for external terminals are S4, S5

8.12 PID Macro 1

PID Macro 1 (P01.20=32)

PID.

- PID setting value: Multi-stage speed.
- PID feedback: AI1.

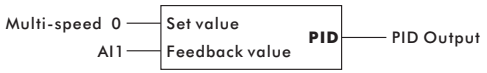

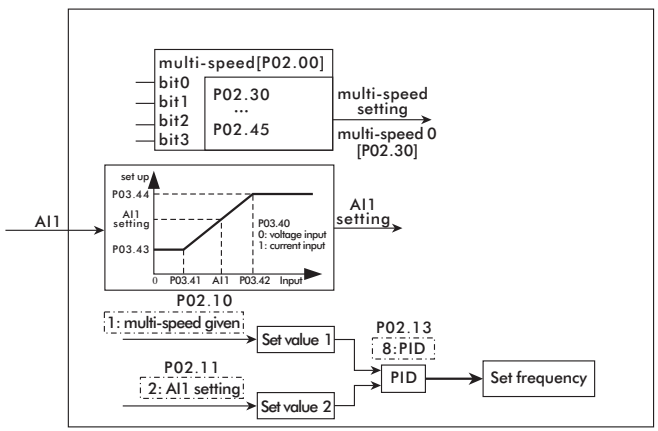

Parameter No.	Function	Setting value	Note
P02.30	Multi-speed 0	20	PID setting value
P03.40	AI1 signal type	0	AI1 signal type is voltage signal
P03.41	AI1 low-end voltage (current)	0.050	PID feedback signal lower limit
P03.42	AI1 high-end voltage (current)	10.000	PID feedback signal upper limit
P03.43	AI1 low-end setting	0.000	PID feedback value lower limit
P03.44	AI1 high-end setting	100.000	PID feedback value upper limit
P02.10	Set value source 1	1	Set value source 1 is multi-speed
P02.11	Set value source 2	2	Set value source 2 is AI1
P02.13	Set channel 1 relationship selection	8	Set channel 1 relationship is PID
P02.00	Multi-speed source	0	Multi-speed selection without external terminals

8.13 PID Macro 2

PID Macro 2 (P01.20=33)

PID.

- PID setting value: AI2.
- PID feedback: AI1.

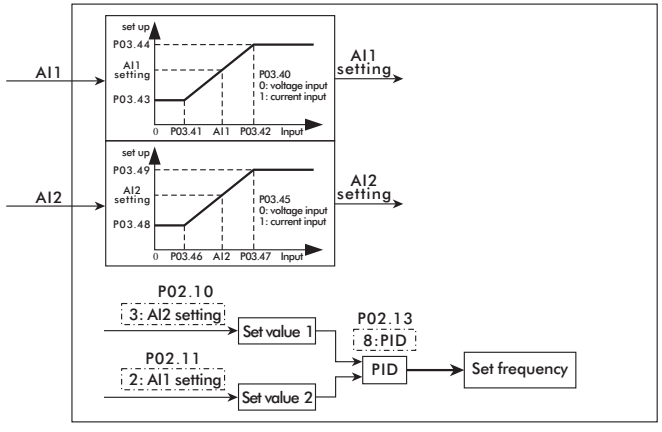

Parameter No.	Function	Setting value	Note
P03.40	AI1 signal type	0	AI1 signal type is voltage signal
P03.41	AI1 low-end voltage (current)	0.050	PID feedback signal lower limit
P03.42	AI1 high-end voltage (current)	10.000	PID feedback signal upper limit
P03.43	AI1 low-end setting	0.000	PID feedback value lower limit
P03.44	AI1 high-end setting	100.000	PID feedback value upper limit
P03.45	AI2 signal type	0	AI2 signal type is voltage signal
P03.46	AI2 low-end voltage (current)	0.050	PID setting signal lower limit
P03.47	AI2 high-end voltage (current)	10.000	PID setting value lower limit
P03.48	AI2 low-end setting	0.000	PID setting value lower limit
P03.49	AI2 high-end setting	100.000	PID setting value upper limit
P02.10	Set value source 1	3	Set value source 1 to AI2
P02.11	Set value source 2	2	Set value source 2 to AI1
P02.13	Set channel 1 relationship selection	8	Set channel 1 relationship to PID
P02.00	Multi-speed source	0	Multi-speed selection without external terminals

8.14 Speed Start Macro

Speed Start Macro (P01.20=50)

Speed start (frequency tracking start).

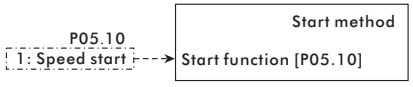

Parameter No.	Function	Setting value	Note
P05.10	Start function	1	Start function is the speed start

8.15 DC injection macro

DC injection macro (P01.20=51)

DC injection starts.

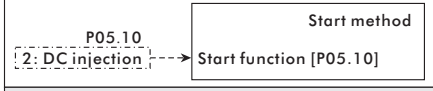

Parameter No.	Function	Setting value	Note
P05.10	Start function	2	Start function is DC injection

8.16 Free parking macro

Free parking macro (P01.20=52)

Free parking.

Parameter No.	Function	Setting value	Note
P05.20	Stop function	0	Stop function is free parking.
P05.21	Stop frequency	100.000	Stop frequency is set to 100.000Hz

8.17 DC brake macro

DC brake macro (P01.20=53)

DC braking stops.

Parameter No.	Function	Setting value	Note
P05.20	Stop function	1	Stop function is DC braking
P05.21	Stop frequency	3	Stop frequency is set to 3Hz

8.18 Emergency acceleration macro

Emergency acceleration macro (P01.20=54)

Start quickly.

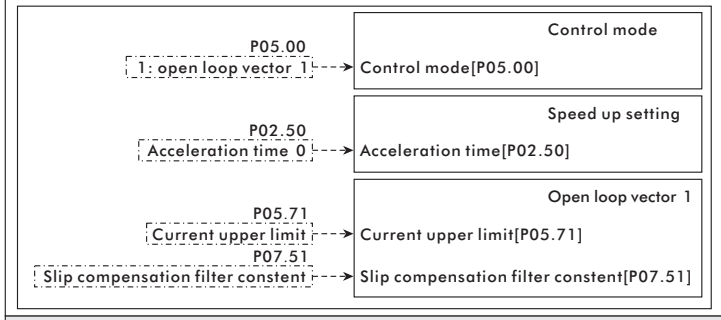

Parameter No.	Function	Setting value	Note
P02.50	Acceleration time 0	1	The acceleration time is set to 1s
P05.00	Control mode	1	Select open loop vector 1
P05.71	Current upper limit	160	The current limit is set to 160%
P07.51	Slip compensation filter constent	150	The slip compensation filter is set to 150%

8.19 Emergency deceleration macro

Emergency deceleration macro (P01.20=55)

Stop quickly.

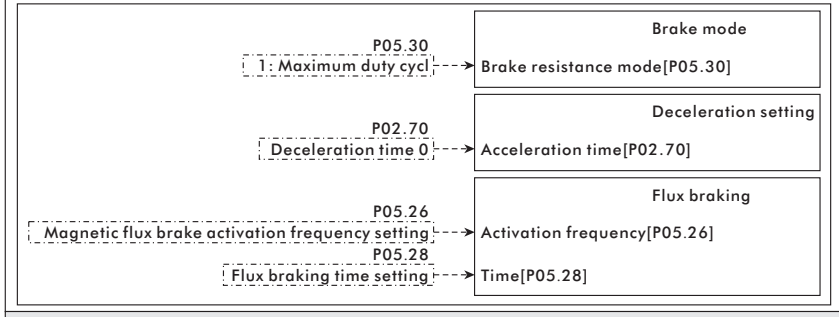

Parameter No.	Function	Setting value	Note
P02.70	Deceleration time 0	1	The deceleration time is set to 1s
P05.26	Magnetic flux brake activation frequency	100	The flux brake activation frequency is set to 100%
P05.28	Flux braking time	3	The flux braking time is set to 3s
P05.71	Current upper limit	180	The current upper limit is set to 180%
P05.30	Brake resistance mode	1	Choose the maximum duty cycle

8.20 Console switch macro

Console switch macro (P01.20=60)

When there is multi-speed signal, it is given by multi-speed, and when there is no multi-speed signal, it is given by keyboard.

- The setting frequency can be selected by multi-speed or keyboard.
- Use external terminals S4、S5。

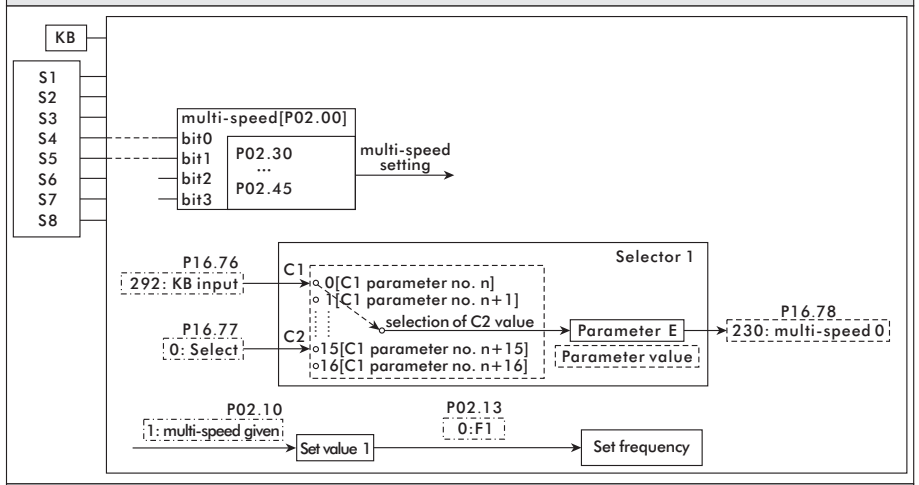

Parameter No.	Function	Setting value	Note
P02.92	Keyboard set value	*	Keyboard potentionmeter
P02.31	Multi-speed 1	30	Multi-speed 1 is set to 15HZ
P02.32	Multi-speed 2	40	Multi-speed 1 is set to 20Hz
P02.33	Multi-speed 3	50	Multi-speed 1 is set to 25Hz
P16.76	Selector 1 parameter source	292	Selector 1 parameter source is keyboard setting value
P16.77	Selector 1 setting	0	Selector 1 is set to 0
P16.78	Selector 1 destination parameter	230	Selector 1 destination parameter source is multi-speed 0
P02.10	Set value source 1	1	Set value source 1 is multi-speed
P02.13	Set channel 1 relationship selection	0	Set the channel relationship selection to F1
P02.00	Multi-speed source	11000	Multi-speed source is external terminal S4, S5

8.21 Frequency reach macro

Frequency reach macro (P01.20=61)

When the frequency reaches the level, the digital output

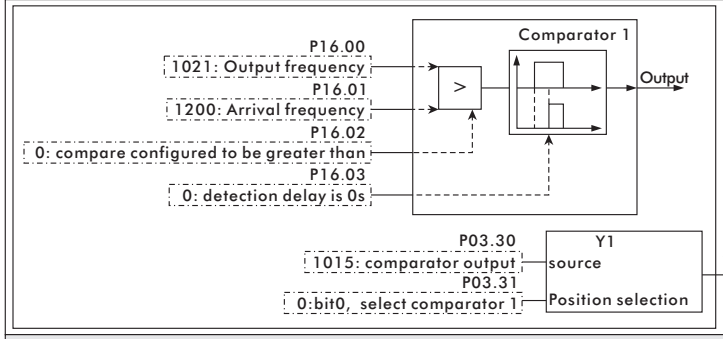

Parameter No.	Function	Setting value	Note
P12.00	Free parameter 1	15	Operating frequency reach setting is 15HZ
P16.00	Comparator 1 input parameter selection	1021	The input parameter of comparator 1 is selected as the output frequency
P16.01	Comparator 1 comparison parameter selection	1200	Comparator 1 comparison parameter is selected as free parameter 1
P16.02	Comparator 1 configuration	0	Select Comparator 1 configuration to choose greater than
P03.30	Y1 terminal source	1300	Y1 terminal source is comparator output
P03.31	Y1 terminal source bit	0	Y1 terminal source BIT is the result of comparator 1

8.22 FDT macro

FDT macro (P01.20=62)

When the frequency reaches the range, the digital output

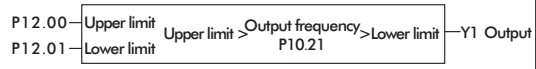

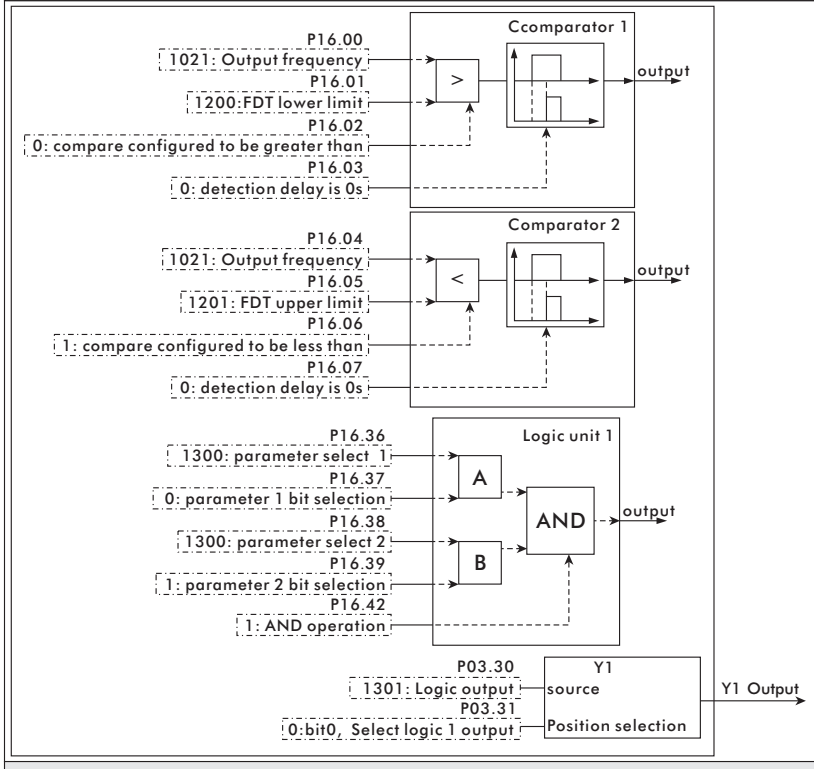

Parameter No.	Function	Setting value	Note
P12.00	Free parameter 1	20	FDT lower limit set to 20Hz
P12.01	Free parameter 2	35	FDT upper limit set to 35Hz
P16.00	Comparator 1 input parameter selection	1021	The input parameter of comparator 1 is selected as the output frequency
P16.01	Comparator 1 comparison parameter selection	1200	Comparator 1 comparison parameter is selected as free parameter 1
P16.02	Comparator 1 configuration	0	Select Comparator 1 configuration to choose greater than
P16.04	Comparator 2 input parameter selection	1021	The input parameter of comparator 2 is selected as the output frequency
P16.05	Comparator 2 comparison parameter selection	1201	Comparator 2 comparison parameter is selected as free parameter 1
P16.06	Comparator 2 configuration	1	Select Comparator 2 configuration to select less than
P16.36	Logic unit 1 parameter selection 1	1300	Logic unit 1 parameter selection 1 is the comparator output
P16.37	Logic unit 1 input bit selection 1	0	Logic unit 1 input bit is selected as comparator 1
P16.38	Logic unit 1 parameter selection 2	1300	Logic unit 1 parameter selection 2 is the comparator output

P16.39	Logic unit 1 input bit selection 2	1	Logic unit 1 input bit selection 2 is comparator 2
P16.42	Logical unit 1 configuration 1	1	Logical unit 1 is configured with AND
P03.30	Y1 terminal source	1301	Y1 terminal source is logic output
P03.31	Y1 terminal source bit	0	Y1 terminal source BIT bit is the result of logic unit 1

8.23 Acceleration and deceleration switching macro

Acceleration and deceleration switching macro (P01.20=63)

When the frequency reaches the level, the acceleration and deceleration are switched

P12.00—Acceleration time switching frequency point
P12.02~P12.03—Acceleration time
P12.01—Deceleration time switching frequency point
P12.04~P12.05—Deceleration time

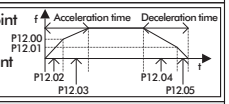

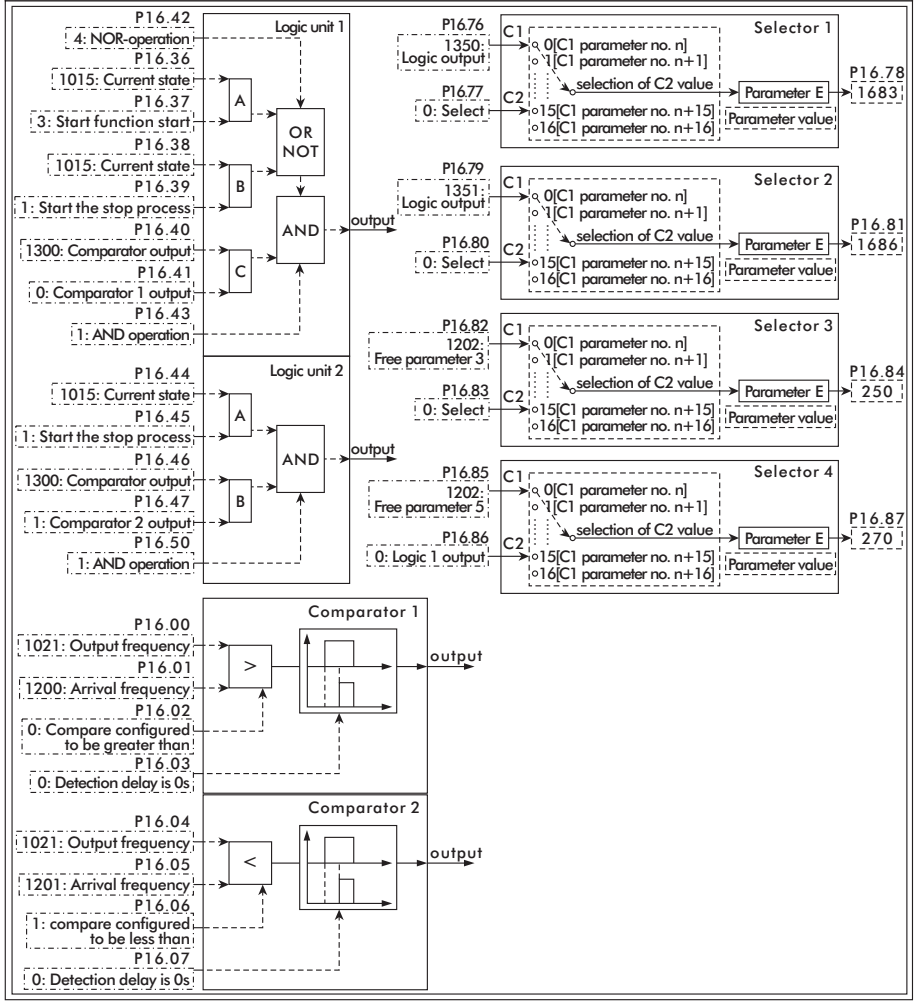

Parameter No.	Function	Setting value	Note
P12.00	Free parameter 1	15	The switching frequency of acceleration time is set to 15Hz
P12.01	Free parameter 2	10	The switching frequency of deceleration time is set to 10Hz
P12.02	Free parameter 3	5	The default acceleration time is set to 5s
P12.03	Free parameter 4	3	Switch acceleration time is set to 3s
P12.04	Free parameter 5	5	The default deceleration time is set to 5s
P12.05	Free parameter 6	8	Switching deceleration time is set to 8s
P16.00	Comparator 1 input parameter selection	1021	Output frequency
P16.01	Comparator 1 comparison parameter selection	1200	Acceleration time switching frequency point
P16.02	Comparator 1 configuration	0	Configuration selection is greater than
P16.04	Comparator 2 input parameter selection	1021	Output frequency
P16.05	Comparator 2 comparison parameter selection	1201	Deceleration time switching frequency point
P16.06	Comparator 2 configuration	1	Configuration selection is less than
P16.36	Logic unit 1 parameter selection 1	1015	Current state
P16.37	Logic unit 1 input bit selection 1	3	Start function start
P16.38	Logic unit 1 parameter selection 2	1015	Current state
P16.39	Logic unit 1 input bit selection 2	1	Start the stop process
P16.40	Logic unit 1 parameter selection 3	1300	Comparator output
P16.41	Logic unit 1 input bit selection 3	0	Comparator 1 output
P16.42	Logical unit 1 configuration 1	4	Configuration 1 is NOR
P16.43	Logical unit 1 configuration 2	1	Configuration 2 is AND
P16.44	Logic unit 2 parameter selection 1	1015	Current state
P16.45	Logic unit 2 input bit selection 1	1	Start the stop process
P16.46	Logic unit 2 parameter selection 2	1300	Comparator output
P16.47	Logic unit 2 input bit selection 2	1	Comparator 2 output
P16.50	Logical unit 2 configuration 1	1	Configuration 1 is AND
P16.76	Selector 1 parameter source	1350	Logic output 1
P16.77	Selector 1 setting	0	Logical choice
P16.78	Selector 1 destination parameters	1683	Selector 3 setting
P16.79	Selector 2 parameter source	1351	Logic output 2
P16.80	Selector 2 setting	0	Logical choice
P16.81	Selector 2 destination parameters	1686	Selector 4 setting
P16.82	Selector 3 parameter source	1202	Default acceleration time
P16.83	Selector 3 setting	0	Acceleration time select
P16.84	Selector 3 destination parameters	250	Acceleration time 0
P16.85	Selector 4 parameter source	1204	Default deceleration time
P16.86	Selector 4 setting	0	Deceleration time select
P16.87	Selector 4 destination parameters	270	Deceleration time 0

8.24 Band-brake signal macro

Band-brake signal macro (P01.20=64)

When the frequency is less than the level, the brake signal is output.

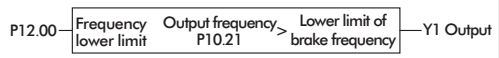

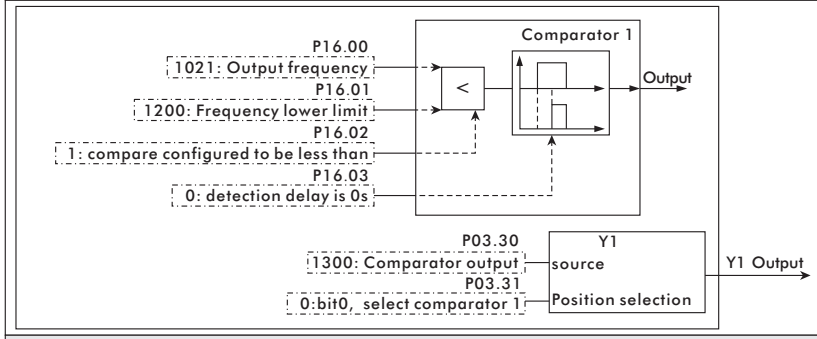

Parameter No.	Function	Setting value	Note
P12.00	Free parameter 1	15	The lower limit of operating frequency is set to 15Hz
P16.00	Comparator 1 input parameter selection	1021	The input parameter of comparator 1 is selected as the output frequency
P16.01	Comparator 1 comparison parameter selection	1200	Comparator 1 comparison parameter is selected as free parameter
P16.02	Comparator 1 configuration	1	Select Comparator 1 configuration to select less than
P03.30	Y1 terminal source	1300	Y1 terminal source is comparator output
P03.31	Y1 terminal source bit	0	Y1 terminal source BIT is the result of comparator 1

8.25 Release signal macro

Release signal macro (P01.20=65)

When the frequency exceeds the level, the digital output. The operating frequency is greater than the arrival frequency and the detection delay time when the output current is greater than the upper limit current, the release signal is output

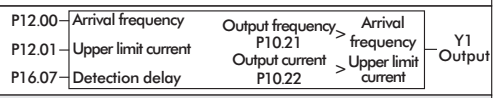

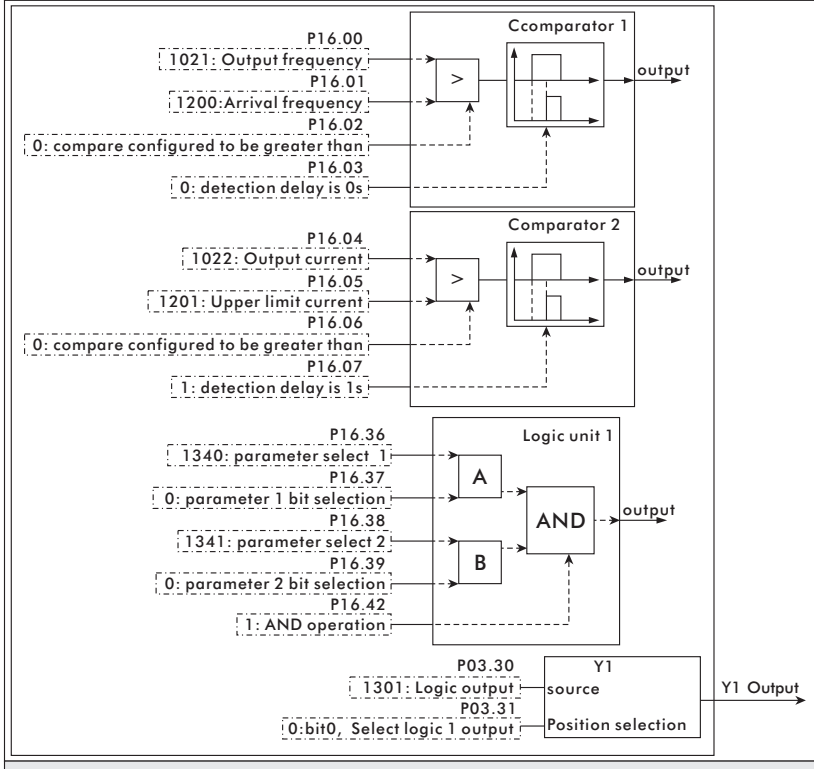

Parameter No.	Function	Setting value	Note
P12.00	Free parameter 1	25	Arrival frequency is set to 25HZ
P12.01	Free parameter 2	15	The upper limit current is set to 15A
P16.00	Comparator 1 input parameter selection	1021	The input parameter of comparator 1 is selected as the output frequency
P16.01	Comparator 1 comparison parameter selection	1200	Comparator 1 comparison parameter is selected as free parameter 1
P16.02	Comparator 1 configuration	0	Select Comparator 1 configuration to choose greater than
P16.04	Comparator 2 input parameter selection	1022	The input parameter of comparator 2 is selected as the output current
P16.05	Comparator 2 comparison parameter selection	1201	Comparator 2 comparison parameter is selected as free parameter 2
P16.06	Comparator 2 configuration	0	Select Comparator 2 configuration to choose greater than
P16.07	Comparator 2 delay time	1	Comparator 2 delay time is 1s
P16.36	Logic unit 1 parameter selection 1	1340	Logic unit 1 parameter selection 1 is the comparator output
P16.37	Logic unit 1 input bit selection 1	0	Logic unit 1 input bit is selected as comparator 1

P16.38	Logic unit 1 parameter selection 2	1341	Logic unit 1 parameter selection 2 is the comparator output
P16.39	Logic unit 1 input bit selection 2	0	Logic unit 1 input bit selection 2 is comparator 2
P16.42	Logical unit 1 configuration 1	1	Logical unit 1 is configured with AND
P03.30	Y1 terminal source	1301	Y1 terminal source is logic output
P03.31	Y1 terminal source bit	0	Y1 terminal source bit is the result of logic unit 1

8.26 Break detection macro

Break detection macro (P01.20=66)

Band break / dry pump detection, generating a fault signal. The operating frequency is greater than the arrival frequency and the detection delay time When the output current is less than the lower limit current, the output is faulty.

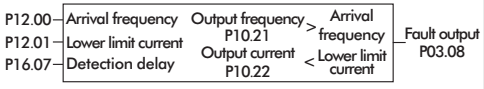

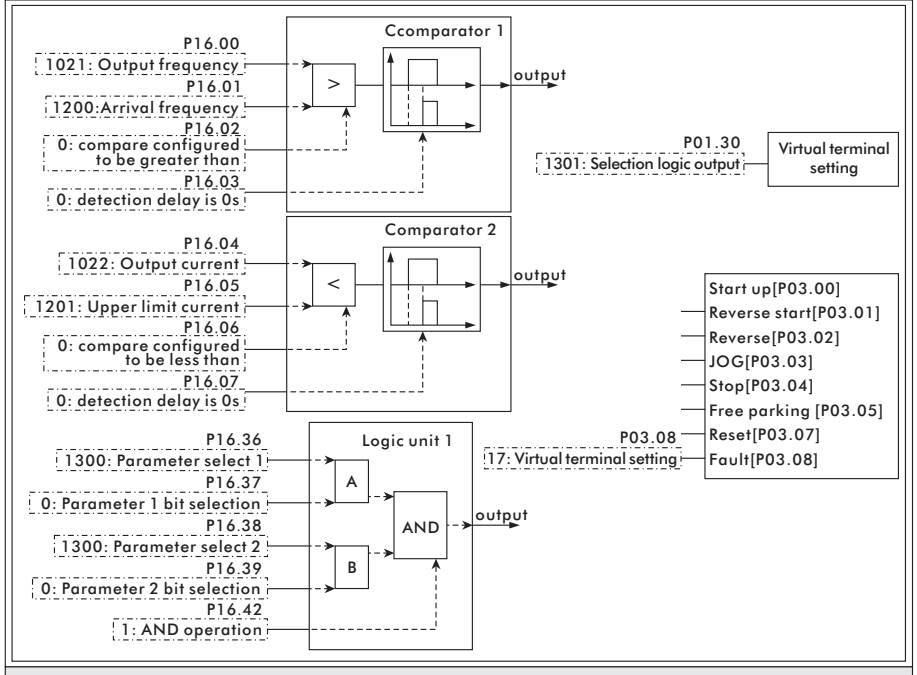

Parameter No.	Function	Setting value	Note
P12.00	Free parameter 1	25	Arrival frequency is set to 25HZ
P12.01	Free parameter 2	5	The lower limit current is set to 5A
P16.00	Comparator 1 input parameter selection	1021	The input parameter of comparator 1 is selected as the output frequency
P16.01	Comparator 1 comparison parameter selection	1200	Comparator 1 comparison parameter is selected as free parameter 1
P16.02	Comparator 1 configuration	0	Select Comparator 1 configuration to choose greater than
P16.04	Comparator 2 input parameter selection	1022	The input parameter of comparator 2 is selected as the output current

P16.05	Comparator 2 comparison parameter selection	1201	Comparator 2 comparison parameter is selected as free parameter 1
P16.06	Comparator 2 configuration	1	Select Comparator 2 configuration to choose lessr than
P16.07	Comparator 2 delay time	10.000	Comparator 2 delay time is 10.000s
P16.36	Logic unit 1 parameter selection 1	1340	Logic unit 1 parameter selection 1 is the comparator output
P16.37	Logic unit 1 input bit selection 1	0	Logic unit 1 input bit is selected as comparator 1
P16.38	Logic unit 1 parameter selection 2	1341	Logic unit 1 parameter selection 2 is the comparator output
P16.39	Logic unit 1 input bit selection 2	0	Logic unit 1 input bit selection 2 is comparator 2
P16.42	Logic unit 1 configuration 1	1	Logical unit 1 is configured with AND
P01.30	Virtual terminal setting	1350	Virtual terminal setting selection logic output 1
P03.08	Source of fault command	17	The fault command comes from the virtual terminal setting bit0

8.27 Signal loss macro

Signal loss macro (P01.20=67)

During the detection delay time,the detection signal is less than the threshold, and a fault signal is generated.

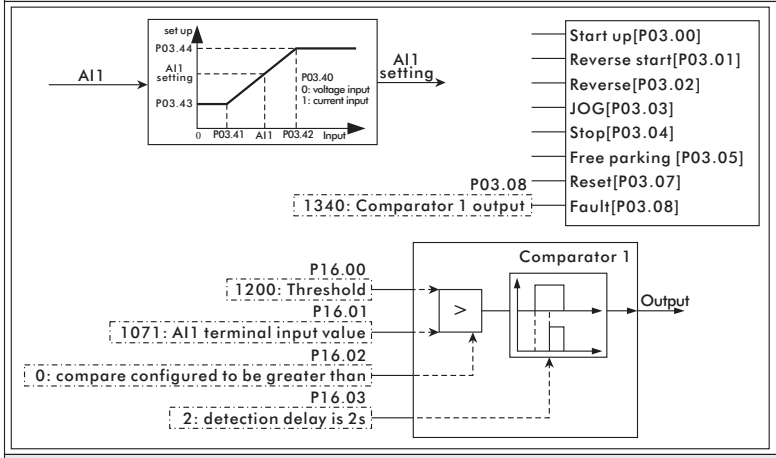

Parameter No.	Function	Setting value	Note
P12.00	Free parameter 1	1	The threshold is set to 0.1V (10V corresponds to 100%)
P16.03	Comparator 1 delay time	2	Comparator 1 delay time is 2s
P16.00	Comparator 1 input parameter selection	1200	The input parameter of comparator 1 is selected as the lost voltage
P16.01	Comparator 1 comparison parameter selection	1071	Comparator 1 comparison parameter is selected as input value of AI1 terminal
P16.02	Comparator 1 configuration	0	Select Comparator 1 configuration to choose greater than
P01.30	Virtual terminal setting	1340	Logic unit 1 parameter selection 1 is the comparator output
P03.08	Source of fault command	17	The fault command comes from the virtual terminal setting bit0

8.28 Internal control eight-stage speed macro

Internal control eight-stage speed macro (P01.20=68)

- The internal control eight-stage timing switching speed.
- The external terminal uses S4 as the start signal.
- Cyclic execution.

S4 terminal — Internal control eight-stage speed enable
P18.04~P18.11 — timing time
P12.00~P12.08 — multi-stage speed
— current number of segments

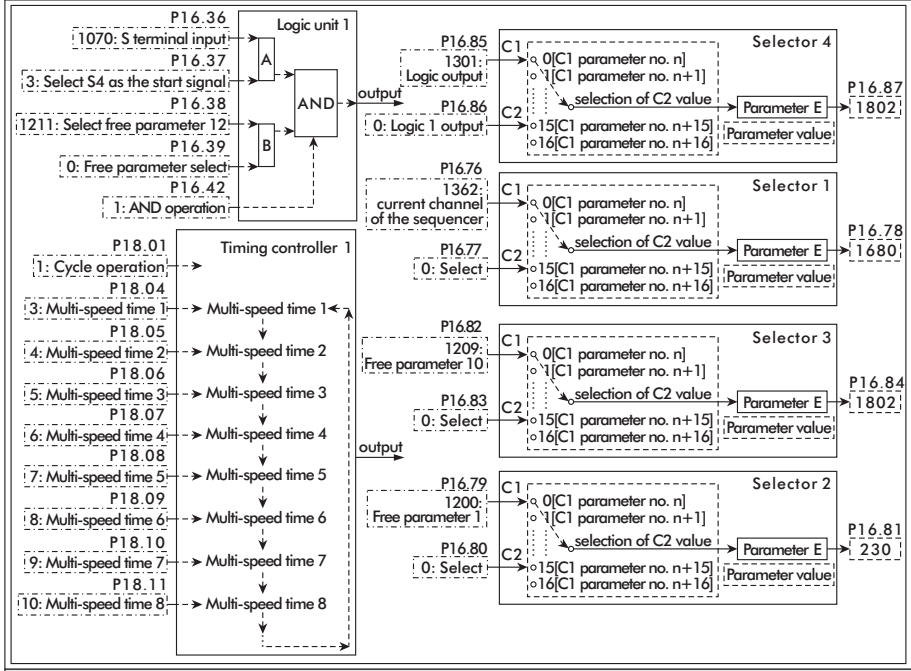

Parameter No.	Function	Setting value	Note
P12.00	Free parameter 1	0	Stop frequency is set to 0Hz
P12.01	Free parameter 2	10	Multi-speed 1 is set to 5Hz
P12.02	Free parameter 3	20	Multi-speed 2 is set to 10Hz
P12.03	Free parameter 4	30	Multi-speed 3 is set to 15Hz
P12.04	Free parameter 5	40	Multi-speed 4 is set to 20Hz
P12.05	Free parameter 6	50	Multi-speed 5 is set to 25Hz
P12.06	Free parameter 7	60	Multi-speed 6 is set to 30Hz
P12.07	Free parameter 8	70	Multi-speed 7 is set to 35Hz
P12.08	Free parameter 9	80	Multi-speed 8 is set to 40Hz
P18.04	Timer 1 phase 1 time	3	Multi-speed time 1 is set to 3s
P18.05	Timer 1 phase 2 time	4	Multi-speed time 2 is set to 4s
P18.06	Timer 1 phase 3 time	5	Multi-speed time 3 is set to 5s
P18.07	Timer 1 phase 4 time	6	Multi-speed time 4 is set to 6s
P18.08	Timer 1 phase 5 time	7	Multi-speed time 5 is set to 7s

P18.09	Timer 1 phase 6 time	8	Multi-speed time 6 is set to 8s
P18.10	Timer 1 phase 7 time	9	Multi-speed time 7 is set to 9s
P18.11	Timer 1 phase 8 time	10	Multi-speed time 8 is set to 10s
P16.37	Logic unit 1 input bit selection 1	3	Select S4 as start signal, 0 as S1, 1 as S2
P18.01	Timer 1 working mode	1	The working mode starts from multi-speed 1 to multi-speed 8 and runs cyclically. If it is set to 0, it will only run once.
P18.00	Timer 1 clock source	3	Multi-speed time unit is S
P16.36	Logic unit 1 parameter selection 1	1070	S terminal input as cycle start signal
P16.38	Logic unit 1 parameter selection 2	1211	Select high level signal
P16.39	Logic unit 1 input bit selection 2	0	Select high level signal
P16.42	Logical unit 1 configuration 1	1	S terminal input high level signal is valid
P12.09	Free parameter 10	5	S terminal without input timing pause If set to 8: S terminal has no input, the current set frequency = stop frequency If set to 9: S terminal has no input, the current set frequency = multi-speed 1
P12.10	Free parameter 11	3	S terminal has input timing start
P12.11	Free parameter 12	1	High level signal
P16.82	Selector 3 parameter source	1209	Selector 3 parameter source is free parameter 10
P16.83	Selector 3 setting	0	Selector 3 is set to 0
P16.84	Selector 3 destination parameters	1802	The destination parameter of selector 3 is the timing controller 1 control command
P16.85	Selector 4 parameter source	1350	Selector 4 parameter source is logic output 1
P16.86	Selector 4 setting	0	Selector 4 is set to 0
P16.87	Selector 4 destination parameters	1683	The purpose parameter of selector 4 is set by selector 3.
P16.76	Selector 1 parameter source	1362	The parameter source of selector 1 is the current channel of timing controller 1.
P16.77	Selector 1 setting	0	Selector 1 is set to 0
P16.78	Selector 1 destination parameters	1680	The purpose parameter of selector 1 is set by selector 2
P16.79	Selector 2 parameter source	1200	Selector 2 parameter source is free parameter 1
P16.80	Selector 2 setting	0	Selector 2 is set to 0
P16.81	Selector 2 destination parameters	230	The destination parameter of selector 2 is multi-speed 0
P02.10	Set value source 1	1	Set value source 1 is multi-speed
P02.13	Set channel 1 relationship selection	0	Set the channel 1 relationship selection to F1
P16.88	Selector 5 parameter source	1360	Timer count
P16.89	Selector 5 setting	0	Selector 5 is set to 0
P16.90	Selector 5 destination parameters	1290	Save timer count when power off
P12.95	Free parameter 96	1803	Eight-speed memory, the value of P12.90 at power-on is given to the parameter number set in P12.95
P16.43	Logical unit 1 configuration 2	0	No effect
P18.03	Timer 1 set value	0	No multi-speed jump
P18.12	Timer 1 phase 9 time	0	Multi-speed time 9 is set to 0s
P18.13	Timer 1 phase 10 time	0	Multi-speed time 10 is set to 0s
P18.14	Timer 1 phase 11 time	0	Multi-speed time 11 is set to 0s
P18.15	Timer 1 phase 12 time	0	Multi-speed time 12 is set to 0s
P18.16	Timer 1 phase 13 time	0	Multi-speed time 13 is set to 0s
P18.17	Timer 1 phase 14 time	0	Multi-speed time 14 is set to 0s
P18.18	Timer 1 phase 15 time	0	Multi-speed time 15 is set to 0s
P18.19	Timer 1 phase 16 time	0	Multi-speed time 16 is set to 0s

CHAPTER 9 - RS485 Communication

9.1 Introduction

The inverter can be controlled and monitored by PLC or host computer software via RS-485.

9.2 Specifications

Table 9-1

Project	Instruction
Way of communication	RS485
Transmission type	Single master and multiple slaves
Number of connections	Max. 31
Transmission distance	Maximum 1200m (recommended within 700m)

Table 9-2

Project	Instruction
Communication speed	2400, 4800, 9600, 19200, 38400 bps
Control sequence	Asynchronous communication
Communication Systems	Half duplex
Stop bit length	0，1，1.5，2 bit
Data bit	7，8 bit
Parity check	No check, even check, odd check

9.3 Communication protocol

The complete Modbus query message includes: device address, function code, sent data, and error detection field. At the same time, the message returned by the device also includes the device address, function code, any data that needs to be returned, and the error detection field. If an error occurs during message reception, or the slave device cannot execute its command, the slave device will create an error message and send a response.

9.3.1 Format description

Table 9-3 Communication format

Address	Function code	Data code	CRC check
8bits	8bits	N*8bits	16bits

1) Address: 1-247 (namely the address of the slave connected to a PC);
2) Function code: supported functions (see Table 9-4);
3) Data code: data content N × 8bits;
4) CRC check: CRC check value;

Table 9-3 Functional coding

Function code	Instruction
0x03	Read holding register
0x06	Preset single register (16-bit mode)
0x10	Preset multiple registers (32-bit mode)

9.3.2 Address coding

In order to be compatible with different host computers, 16-bit and 32-bit access methods can be used for the same parameter. The corresponding addresses are shown in the table below. When using the 16-bit method, please note that the parameter value must be within the 16-bit expression range.

Table 9-4 Function coding rules

Parameter value	Address	RAM Address
16 bit	Parameter No. - 1	Parameter No. - 1 + 32768
32 bit	Parameter No. - 1 + 16384	Parameter No. - 1 + 16384 + 32768

Note: When writing by address, the parameter value will be stored in the inverter EEPROM. Frequent storage of EEPROM will reduce the service life of EEPROM, so when there is no need to store, just change the value in RAM, then use the RAM address to write the parameters.

Table 9-6 Common Address Table

Communication setting value (write only), enable communication settings refer to the parameters P02.10~P02.14

Function	Parameter No.	16 bit method	32 bit method	Remark
Communication setting value	P02.90	8121H	C121H	P01.47=0, the upper computer 0~100000 corresponds to 0~maximum setting value P02.18; P01.47=1, the upper computer 0~10000 corresponds to 0~maximum setting value P02.18; P01.47=2, The upper computer 0~1000 corresponds to 0~maximum setting value P02.18; P01.47=3, the upper computer 0~100 corresponds to 0~maximum setting value P02.18

Control commands (write only), see the parameters P03.00 ~ P03.09 to enable the corresponding communication commands

Function	Parameter No.	16 bit method	32 bit method	Command word (bit)	Definition
Communication commands	P02.91	8122H	C122H	0	Start up
				1	Reverse
				2	Start reverse
				3	JOG
				4	Stop
				5	Emergency stop
				6	Safe stop
				7	Reset
				9	Parameter self-learning
				11	Pause
				13	UP (incremental)
				14	DOWN (decreasing)

Inverter status (read only)

Function	Parameter No.	16 bit method	32 bit method	Status word (bit)	Definition
Current state	P10.15	03F6H	43F6H	0	Powering off
				1	Stopping
				2	Running
				3	Start function start
				4	Parameter self-learning start
				5	Operating
				6	Ready
				10	Fault
				11	Alarm
				12	STO status

Inverter failure (read only)

Function	Parameter No.	16 bit method	32 bit method	Fault word (bit)	Definition
Fault state	P10.16	03F7H	43F7H	1	System abnormality
				4	Ground fault
				5	Short circuit to ground
				6	Output short circuit
				7	Output overcurrent
				8	DC bus overvoltage
				9	DC bus undervoltage
				10	Inverter overheating
				13	Rectifier bridge overheating
				14	U phase missing phase

Function	Parameter No.	16 bit method	32 bit method	Fault word (bit)	Definition
				15	V phase missing phase
				16	W phase missing phase
				19	No motor connection
				20	Input phase loss
				21	Inverter overload
				22	Overtorque
				24	Motor overheating
				25	Motor overload
				26	Current limit
				27	Input power down

Inverter function (read only)

Function	Parameter No.	16 bit method	32 bit method	Data range	bit
Output frequency	P10.21	03FCH	43FCH	-65535.0~65535.0	Hz
Output current	P10.22	03FDH	43FDH	0.00~65535.00	A
Output voltage	P10.23	03FEH	43FEH	0.0~65535.0	V
Output torque	P10.24	03FFH	43FFH	0.000~65535.000	N·m
DC voltage	P10.25	0400H	4400H	0.0~65535.0	V
Inverter temperature	P10.26	0401H	4401H	0~65535	℃
Power	P10.30	0405H	4405H	0.000~65535.000	kW
Energy consumption	P10.31	0406H	4406H	0.000~4294967.295	kW*h
Hours of power on	P10.40	040FH	440FH	0.000~4294967.295	h
Number of power-on	P10.41	041FH	441FH	0~4294967295	
S terminal input status	P10.70	042DH	442DH	0~4294967295	
AI1 terminal input value	P10.71	042EH	442EH	-65535.000~65535.000	%
AI2 terminal input value	P10.72	042FH	442FH	-65535.000~65535.000	%
Y terminal output status	P10.74	0431H	4431H	0~4294967295	
AO1 terminal output value	P10.75	0432H	4432H	-65535.000~65535.000	%
AO1 terminal output value	P10.76	0433H	4433H	-65535.000~65535.000	%

9.3.3 Read holding register

Read the data in the holding register, taking parameter P10.16 fault status and parameter P02.30 multi-stage speed 0 as an example.

➢ Fault state (example)
Read the value of inverter parameter P10.16, it can be known from the fault status table, just read 16 bits then the register address = 1016-1 = 1015 (03F7H).
Send data: 01 03 03 F7 00 01 35 BC
Receive data: 01 03 02 00 0A 38 43
P10.15 = 10 (000AH). The fault state is that the inverter is overheated. (See fault code)

Send data

Slave address	01H
Function code	03H
Register address	04H(high byte)
	24H(low byte)
Data	00H(high byte)
	01H(low byte)
CRC check	C5H(low byte)
	31H(high byte)

Receive data

Slave address	01H
Function code	03H
Number of data (Calculated in Byte)	02H
Data	00H(high byte)
	0AH(low byte)
CRC check	38H(low byte)
	43H(high byte)

➢ Multi-speed 0 (example)
Read the value of inverter parameter P02.30, when accessed with 32 bits, the register address = 230-1 + 16384 = 16613 (40E5H).
Send data: 01 03 40 E5 00 02 C0 3C
Receive data : 01 03 04 00 00 88 B8 9C 41
Reading data is 35000(88B8H), it can be seen that P02.30 = 35.000

Send data

Slave address	01H
Function code	03H
Register address	40H(high byte)
	E5H(low byte)
Data	00H(high byte)
	02H(low byte)
CRC check	C0H(low byte)
	3CH(high byte)

Receive data

Slave address	01H
Function code	03H
Number of data (Calculated in Byte)	04H
Data (high byte)	00H(high byte)
	00H(low byte)
Data (low byte)	88H(high byte)
	B8H(low byte)
CRC check	9CH(low byte)
	41H(high byte)

9.3.4 Preset a single register

Write the value of inverter parameter P05.00, when accessed with 16 bits, the register address = 500-1 = 499 (01F3H).
Send data: 01 06 01 F3 00 01 B9 C5
Receive data: 01 06 01 F3 00 01 B9 C5

Send data

Slave address	01H
Function code	06H
Register address	01H(high byte)
	F3H(low byte)
Data	00H(high byte)
	01H(low byte)
CRC check	B9H(low byte)
	C5H(high byte)

Receive data

Slave address	01H
Function code	06H
Register address	01H(high byte)
	F3H(low byte)
Data	00H(high byte)
	01H(low byte)
CRC check	B9H(low byte)
	C5H(high byte)

9.3.5 Preset multiple registers

Write the value of parameter P02.91, when accessed with 32 bits, the register address = 291-1 + 16384 = 16674 (4122H)

Table 9-7 Command control word table

Command word(bit)	Definition
0	Start
1	Reverse
2	Start reverse
3	JOG
4	Stop
5	Emergency stop
6	Safe stop
7	Reset
9	Parameter self-learning
10	Tripping
11	Pause
13	UP (incremental)
14	DOWN (decreasing)

Taking the stop control word as an example, the value of parameter P02.91 is set to 16
Send data : 01 10 41 22 00 02 04 00 00 00 10 4D F1
Receive data : 01 10 41 22 00 02 F5 FE(16 hexadecimal)

Send data

Slave address	01H
Function code	10H
Register address	41H(high byte)
	22H(low byte)
Number of registers (16 bits)	00H(high byte)
	02H(low byte)
Number of data (Calculated in Byte)	04H
Data (high byte)	00H(high byte)
	00H(low byte)
Data (low byte)	00H(high byte)
	10H(low byte)
CRC check	4DH(low byte)
	F1H(high byte)

Receive data

Slave address	01H
Function code	10H
Register address	41H(high byte)
	22H(low byte)
Number of registers (16 bits)	00H(high byte)
	02H(low byte)
CRC check	F5H(low byte)
	FEH(high byte)

9.3.6 Communication error codes

The inverter returns data when a communication error occurs. The format is shown in Table 9-8.Communication error function code = request function code + 128.

Table 9-8 Communication error data format

Address	Function code	Fault code	CRC check
8bits	8bits	8bits	16bits

Table 9-9 Error function code description

Fault code	Instruction
0x00	Parameter not exist
0x01	Cannot write defined parameters
0x02	The value of the parameter exceeds the upper limit of the parameter
0x07	Unchangeable
0x0B	Not allowed to write
0x11	The data of the defined parameters cannot be changed in the current mode of the inverter
0x12	Other errors
0x40	Invalid data address
0x41	Invalid length
0x42	Invalid data length and value
0x43	Invalid parameter
0x82	No bus connection for defined parameters
0x83	The factory set value has been selected data and cannot be changed

Note: the inverter communicates with the host computer, and it is recommended that the host computer set the timeout during 200ms~1000ms.

CHAPTER 10 - Fault exclusion and repair

10.1 Protection function

⚠ Alarm

The inverter must be rectified before the fault is reset, otherwise it may result in reduced product life and damage to other equipment.

10.2 Fault code table

Fault code	Protection function	Explanation
E0001	System abnormality	Inverter hardware failure or software failure
E0004	Ground fault	The resistance value to the ground is abnormal and leakage occurs
E0005	Short circuit to ground	Short circuit to ground.
E0006	Output short circuit	When the output current of the inverter is greater than 250% of the rated current of the inverter, the inverter turns off the output.
E0007	output overcurrent	When the output current of the inverter is greater than 200% of the rated current of the inverter, the inverter turns off the output.
E0008	DC bus overvoltage	If the DC voltage of the main circuit is higher than 400V (220V model) or 800V (380V model) when the motor decelerates, the inverter shuts off the output.
E0009	DC bus undervoltage	When the input voltage decreases, if the DC voltage of the main circuit is lower than 200V (220V model) or 340V(380V model), the inverter will turn off the output
E0010	Inverter overheating	When the temperature of the heat sink is detected to be overheated, the inverter turns off the output.
E0011	Self-learning failure	The self-learning parameters are incorrect or the motor is abnormal.
E0013	Rectifier bridge overheating	The rectifier module is overheated
E0014	U phase missing phase	U phase missing phase
E0015	V phase missing phase	V phase missing phase
E0016	W phase missing phase	W phase missing phase
E0019	No motor connection	The motor is disconnected during operation.
E0020	Input phase loss	Input power phase loss
E0021	Inverter overload	When the output current of the inverter exceeds the rated rating of the inverter (150% for 1 minute), the inverter turns off the output.
E0022	Overtorque	Motor over torque
E0024	Motor overheating	The motor temperature is too high.
E0025	Motor overload	When the output current of the inverter exceeds the rated rating of the motor (150% for 1 minute), the inverter turns off the output.
E0026	Current limit	The output current exceeds the set limit threshold.
E0027	Input power down	The input voltage is lower than the power-down level (P05.86).
E0033	STO	STO safe torque stop
E0034	STI1	STI1 internal circuit abnormal
E0035	STI2	STI2 internal circuit abnormal
E0036	STI3	The internal circuit of STI1 and STI2 is abnormal.
E0063	User failure	User-defined fault (see parameter P03.08)

Note: The alarm code is also in accordance with the above table, for example, the keyboard display "A0025" represents the motor overload alarm.

10.3 Maintenance and inspection prevention

⚠ Alarm

Make sure to remove input power during maintenance.
Make sure that the DC connection capacitor is discharged for maintenance, even if the bus capacitance of the inverter's main circuit is still charged after the power is turned off. Use the detector to check the voltage between P + and P- before proceeding.
H1 series inverters have ESD (electrostatic discharge) sensitive components. During inspection or installation, take protective measures to avoid ESD before touching, do not change any internal parts and connections, and do not change the inverter.

10.4 Checkpoint

- Daily inspection
  Appropriate installation environment
  Cooling system failure
  Uncommon shock and noise
  Uncommon overheating and discoloration
- Periodic inspection
  Screws and nuts may be loose due to vibration, temperature changes, etc.
  Check that they are fastened and as tight as possible
  Foreign objects in the cooling system
  Use air to clean
  Check the cooling fan rotation conditions, capacitor conditions and magnetic contactor connection
  If not normal replacement

10.5 Parts replacement

The inverter consists of electronic components such as semiconductor devices.
Due to structural or physical characteristics, the following components may age, causing the inverter to fail to operate.
The components must be replaced periodically.

CHAPTER 11 - Technical Notes

Project		Project description
Output	Rated voltage;Frequency	Three phase:380~440V,50Hz/60Hz; Single phase:200V~240V,50Hz/60Hz
	Allowable voltage working range	Three phase:320V~460V; Single phase:180V~ 260V; Voltage imbalance rate:<3%;Frequency:±5%
Input	Voltage	0~Rated input voltage
	Frequency	0Hz~1000Hz
	Overload capacity	150% rated current for 1 minute, 180% rated current for 2 seconds
Main control performance	Control mode	V/F, Speed sensorless vector control
	Modulation	Space vector PWM modulation
	Motor type	Asynchronous motor, synchronous motor, single-phase motor (please consult the manufacturer when using)
	Starting torque	150% rated torque at 0.5Hz
	Speed range	1:100(Without speed sensor)
	Frequency accuracy	Digital setting: maximum frequency±0.01%;Analog setting: maximum frequency±1%
	Frequency resolution	Digital setting: 0.01Hz; Analog setting: maximum frequency 1%
	Acceleration and deceleration curve	Straight line / S curve acceleration / deceleration
	Limiting	Automatically limit the current during operation to prevent frequent overcurrent fault tripping
	Instantaneous power failure	Support instantaneous stop and automatic frequency reduction
Run function	Command source	Keyboard given, terminal given, communication given
	Source of settings	Digital setting, analog setting, multi-speed, communication setting
	PID	Support main given + PID
Operation keyboard	Nixie tube display	Display output frequency, output current, output voltage, bus voltage, display value 1, display value 2, current alarm, current fault
	External keyboard	support
Protective function		Overcurrent protection, overvoltage protection, undervoltage protection, overheat protection, overload protection, phase loss protection, earth leakage, etc.
Environment	Place of use	Indoor, no direct sunlight, no dust, corrosive gas, flammable gas, oil mist, water vapor, dripping water or salt etc.
	Altitude	For derating above 1000 meters, derate 10% for increase every 1000 meters
	Ambient temperature	-10℃ ~ + 40℃ (Ambient temperature is 40℃~50℃, please use derating)
	Humidity	5% ~ 95% RH, no condensation
	Storage temperature	-40℃~+70℃
	Vibration	Less than 5.9 m / s 2 (0.6g)

CHAPTER 12 - Selection of braking resistor

12.1 Brake resistor configuration table

Voltage level	Inverter power	Braking unit		Braking resistor			Braking torque (10%UD)
		Specification	Quantity(piece)	Power(w)/Resistance(Ω)		Quantity(piece)	
220V	0.75kW	Built-in		80	120	1	100%
	1.5kW			150	100	1	
	2.2kW			300	68	1	
	3.7kW			300	68	1	
	5.5kW			400	30	1	
	7.5kW			400	30	1	
380V	0.75kW			150	300	1	
	1.5kW			200	300	1	
	2.2kW			200	200	1	
	4.0kW			400	150	1	
	5.5kW			400	100	1	
	7.5kW			750	75	1	
	11kW			1000	60	1	
	15kW			1500	40	1	
	18.5kW			2500	30	1	
	22kW			3000	30	1	
	30kW			5000	25	1	
	37kW			7500	20	1	
	45kW	DBU-4045	1	10000	13.6	1	
	55kW	DBU-4030	2	5000*2	25	1	
	75kW	DBU-4045	2	7500*2	15	1	
	90kW		2	10000*2	13.6	1	
	110kW	DBU-4160	1	20000	8	1	
	132kW		1	25000	6	1	
	160kW		1	30000	6	1	

Note:

1. Please select the power number and resistance value recommended by our company
2. The power numbers and resistance value recommended in the above table are calculated according to 100% braking torque and 10% utilization rate. When the load demand and system reliability are met, the resistance power and resistance value can be appropriately increased or decreased; When it is required to increase the braking torque or use a higher power, the power and resistance value of the braking resistor should be changed appropriately, or consult our company.
3. When installing the braking resistor, be sure to consider the safety and non-flammability of the surrounding environment.
4. Braking frequency UD = t1 / t2 * 100%
   t1: braking time within one working cycle
   t2: one duty cycle

The braking usage rate doubles and the power of the corresponding braking unit and braking resistor is doubled.

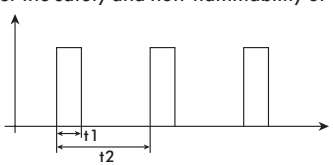

1. In the above table, the resistance value and power greater than 2500W are the total resistance value and power, the power of the resistance based on 2500W as the base number, for example, if you need a 2500W 6Ω resistor, you need 10 250W 6Ω resistors in parallel.

Calculation of braking resistor

statistics show that when the braking current IB flowing through the energy-consuming circuit is equal to half of the rated current of the motor, the braking torque of the motor is approximately equal to its rated torque:

IB=IMN/2 TB≈TMN or IB=2UB/IMN

In the formula:

IB—Braking current,A; IMN—Motor rated current,A;

TB—Braking torque,N.m; TMN—Motor rated torque,N.m。

In general, the selection range of braking torque is

TMN<TB<2TMN then:IMN<IB<2IMN

The user can decide the braking current according to the specific situation of the production machinery.
After the braking current is determined, it is easy to calculate the braking resistance

RB=UB/IB RBmin=UB/IMN

UB is the braking threshold voltage; RB is the resistance of the braking resistor, where UB is generally 1.1 times the rated bus voltage; Rbmin is the minimum value of the braking resistor
Common values of braking threshold voltage:

AC220V:DC380V AC380V:DC680V AC660V:DC1140V

Knowing IB and RB can determine the power of the resistor

λ : Actual resistance value / calculated value first; ED%: Braking utilization rate

For example:
Suppose an existing 7.5KW motor has a rated current of 18A and a rated input voltage of 380V
then there are: RB=680V/9A=75Ω
RBmin=680/18=38Ω
75Ω according to experience
Power of braking resistor = 1 * 6802/75 * 0.1 = 616W
In actual use, the power can be properly amplified.

12.2 Installation dimension drawing of braking resistor

Rated power (w)	Size(mm)									
	L1(±2)	L2(±5)	L3(±3)	D(±2)	B	B1	H	H1(±3)	N	φd
80	152	174	196	28	6.5	28	28	61	10	4.5
150	195	217	239	40	8	40	41	81	12	5.5
200	195	217	239	40	8	40	41	81	12	5.5
300	282	304	326	40	8	40	41	81	12	5.5
400	282	304	326	40	8	40	41	81	12	5.5
750	316	338	360	50	8	50	45	101	16	6
1000	300	325	350	60	8.5	60	60	119	16	6
1500	415	440	465	60	8.5	60	60	119	16	6
2000	510	535	560	60	8.5	60	60	119	16	6
2500	600	625	650	60	8.5	60	60	119	16	6

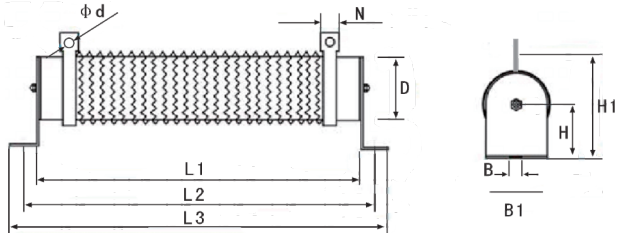

CHAPTER 13 - Dimensions

H1 Series structure size table						
Frame number	Size(mm)					
	W(width)	H(height)	D(depth)	A	B	d
F1	85	170	124	67.3	158	5
F2	97	194	133	85	184	5
F3	126	237	147	112	223	5
F4	168	298	160	154	283	6
F5	198	355	177	183	338	6
F6	250	400	208	230	380	7
F7	280	545	292	200	526	9
F8	380	648	299	300	626	11
F9	450	798	318	340	773	11

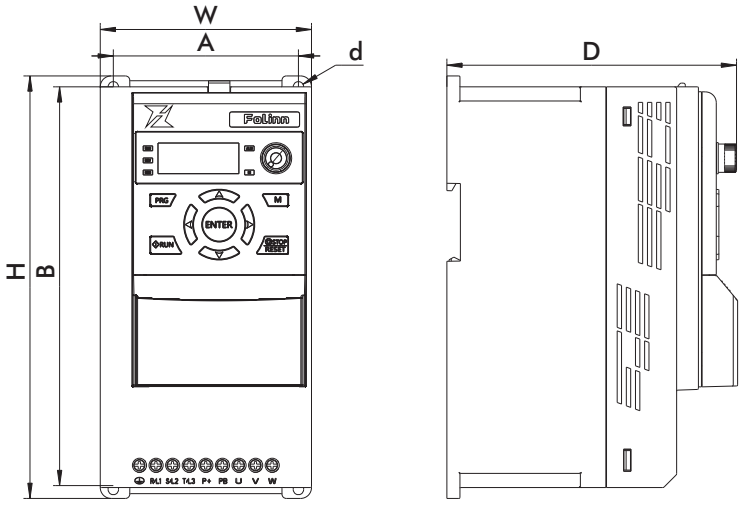

CHAPTER 14 - Quick parameter configuration table

Quick parameters	Basic parameters	Function
P00.09	P01.11	Parameter operation
P00.10	P02.10	Setting (frequency) source F1
P00.11	P02.11	Setting (frequency) source F2
P00.12	P02.13	Set relationship selection
P00.13	P02.18	Maximum setting
P00.14	P05.08	Motor output frequency upper limit
P00.15	P02.00	Multi-speed source
P00.16	P02.30	Multi-speed 0
P00.17	P02.31	Multi-speed 1
P00.18	P02.32	Multi-speed 2
P00.19	P02.33	Multi-speed 3
P00.20	P02.34	Multi-speed 4
P00.21	P02.35	Multi-speed 5
P00.22	P02.36	Multi-speed 6
P00.23	P02.37	Multi-speed 7
P00.24	P02.50	Acceleration time 0
P00.25	P02.70	Deceleration time 0
P00.26	P02.24	JOG frequency
P00.30	P03.00	Start command source
P00.31	P03.01	Reverse start command source
P00.32	P03.02	Reverse command source
P00.33	P03.03	JOG command source
P00.34	P03.04	Source of stop command
P00.35	P03.05	Free parking order source
P00.36	P03.07	Reset command source
P00.37	P03.20	S1 type
P00.38	P03.21	S2 type
P00.39	P03.22	S3 type
P00.40	P03.30	Y1 terminal source
P00.41	P03.41	AI1 low-end voltage (current)
P00.42	P03.42	AI1 high-end voltage (current)
P00.43	P03.43	AI1 low-end settings
P00.44	P03.44	AI1 high-end settings
P00.45	P03.61	AO1 signal source
P00.46	P03.62	AO1 low-end settings
P00.47	P03.63	AO1 high-end settings
P00.48	P03.64	AO1 low-end voltage (current)
P00.49	P03.65	AO1 high-end voltage (current)
P00.50	P04.00	PID proportional gain
P00.51	P04.01	PID integral gain
P00.52	P04.05	PID output upper limit
P00.53	P04.06	PID output lower limit

Quick parameters	Basic parameters	Function
P00.53	P04.06	PID output lower limit
P00.54	P04.09	PID range
P00.55	P04.11	PID sleep frequency
P00.56	P04.12	PID enters sleep time
P00.57	P04.13	PID wakeup deviation
P00.58	P04.14	PID entry wake-up time
P00.59	P04.15	PID sleep action
P00.60	P05.10	Start function
P00.61	P05.11	Start Time
P00.62	P05.12	Start frequency
P00.63	P05.19	DC injection current
P00.64	P05.20	Stop function
P00.65	P05.21	Stop frequency
P00.66	P05.22	DC braking current
P00.67	P05.23	DC braking time
P00.68	P05.30	Brake resistance mode
P00.70	P05.00	Control method
P00.71	P06.05	Carrier frequency
P00.72	P06.11	Motor rated Power
P00.73	P06.12	Motor rated voltage
P00.74	P06.13	Motor rated frequency
P00.75	P06.14	Motor rated current
P00.76	P06.15	Motor rated speed
P00.78	P07.71	VF curve - F1
P00.79	P07.72	VF curve - F2
P00.80	P07.73	VF curve - F3
P00.81	P07.74	VF curve - F4
P00.82	P07.75	VF curve - V0
P00.83	P07.76	VF curve - V1
P00.84	P07.77	VF curve - V2
P00.85	P07.78	VF curve - V3
P00.86	P07.79	VF curve - V4

CHAPTER 15 - Standard card (H0101) instructions for use

15.1 Overview

The H10001 card is a multi-functional I / O standard card used for H1 series inverters. It can realize 4 digital inputs, 1 relay output and 1 analog input. It also has an RS-485 communication interface (integrated in Ethernet port), can be connected to the external keyboard.

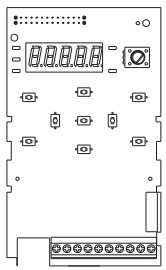

H0101 standard card Distribution diagram

15.2 Mechanical installation

Please install it when the inverter is completely powered off; align the pins(26 pins) on the H0101 card and the inverter power board plug tightly.

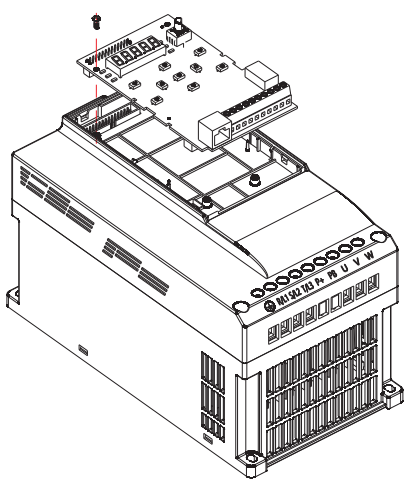

H0101 standard card Mechanical installation drawing

15.3 Wiring diagram

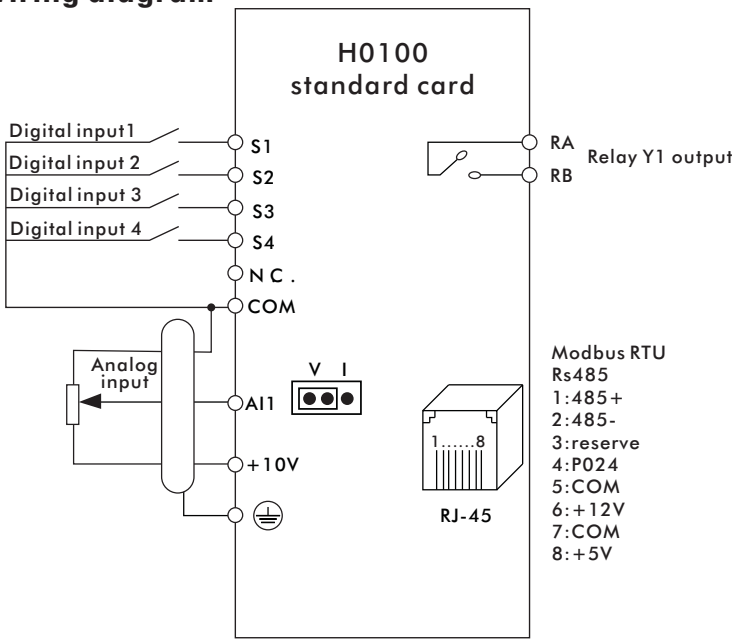

15.4 Control terminal

15.4.1 Terminal specifications

Terminal symbol	Terminal name	Function Description
+10V	10V power supply	Provide + 10V power to the outside, maximum output current 50mA
AI1	Analog input terminal	1. Iput voltage range: DC 0V ~ 10V 2. Input current range: 0 ~ 20mA 3. Select voltage or current through AI1 jumper
COM	Digital, analog	Internally isolated from communication ground GND
S1~S4	Digital input terminal	1. Optocoupler isolation 2. Input impedance: 2.4kΩ 3. Voltage range during level input, 9V ~ 30V
N.C.	reserve	Reserved terminal
RA RB	Relay output	1. Resistive load:250VAC 3A/30VDC 3A; 2. Inductive load:250VAC 0.2A/24VDC 0.1A(cosφ=0.4);
RJ45	Network port	The keyboard can be externally connected or connected to the host computer

15.4.2 Terminal wiring

A. Digital input terminal:

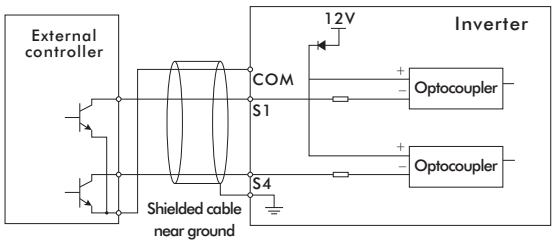

Digital input terminal wiring

Note: The wiring method of the digital input terminal of the standard configuration card is NPN type. If the user needs other wiring methods, please consult our technical staff.

B. Analog input terminal:

Because weak analog voltage signals are particularly susceptible to external interference, shielded cables are generally required, and the wiring distance should be as short as possible, not exceeding 20 meters. As shown below:

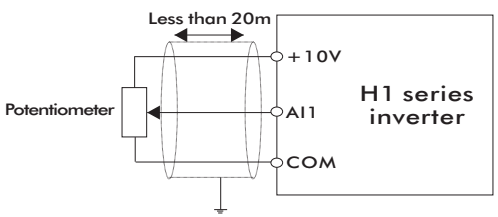

Schematic diagram of analog input terminal wiring

At some occasions where the analog signal is severely interfered, the analog signal source needs to add a filter capacitor or a ferrite core. As shown below:

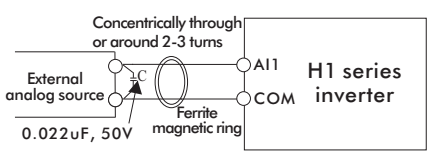

Analog input terminal plus filter processing wiring diagram

CHAPTER 16 - H0110 Card instructions for use

16.1 Overview

H0110 card is a multifunctional I/O card for H1 series inverter. It can realize 4 channels digital input, 2 channels of relay output, 1 channel of analog input and 2 channels of analog output , and also has RS-485 communication interface, can be connected to the external keyboard

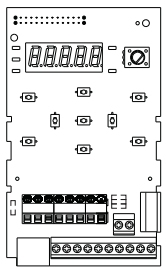

H0110 card Distribution diagram

16.2 Mechanical installation

Please install when the inverter is completely powered off; align the pins(26 pins) on the H0110 card and the inverter power board plug tightly. .

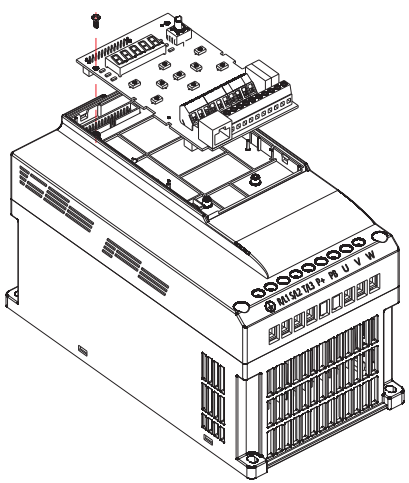

H0110 card mechanical installation drawing

16.3 Wiring diagram

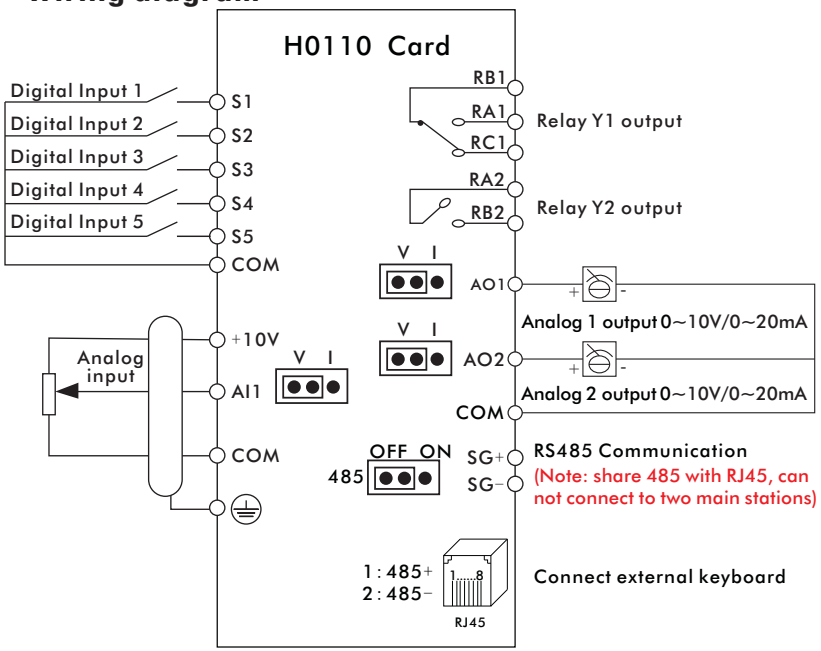

16.4 Control terminal

16.4.1 Terminal specifications

Terminal symbol	Terminal name	Function Description
+10V	10V power supply	Provide +10 V power supply, maximum output current 50 mA
AI1	Analog input terminal	1. Iput voltage range: DC 0V ~ 10V 2. Input current range: 0 ~ 20mA 3. Select voltage or current through AI1 jumper
AO1	Analog output 1	1. Iput voltage range: DC 0V ~ 10V 2. Input current range: 0 ~ 20mA 3. Select voltage or current through AO1 or AO2 jumper
AO2	Analog output 2	
COM	Digital, analog	Internal isolation from communication ground GND
S1~S5	Digital input terminal	1. Optocoupler isolation 2. Input impedance: 2.4kΩ 3. Voltage range during level input, 9V ~ 30V
RA1,RB1,RC1	Relay output (one path is always open , one path is always closed)	Contact capacity: 250VAC 3A/30VDC 3A
RA2,RB2	Relay output (Default open)	Contact capacity: 250VAC 5A/30VDC 5A
SG+,SG-	485 Communication terminals	RJ45 network port can be connected to the external keypad. Note: The 485 communication terminal and the network port share one 485, cannot be connected to the master station of two stations at same time.
RJ45	485 Communications network	

16.4.2 Terminal wiring

A. Digital input terminal:

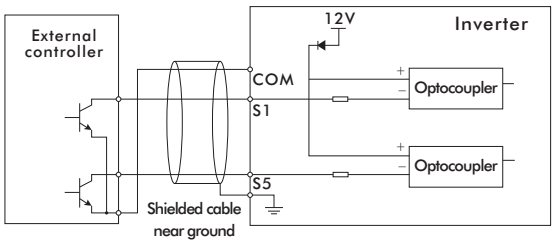

Digital input terminal wiring

Description: The wiring mode of the digital input terminal of the H0110 card is NPN type
If the user needs other wiring methods, please consult our technical staff.

B. Analog input terminal:

Because weak analog voltage signals are particularly susceptible to external interference, shielded cables are generally required, and the wiring distance should be as short as possible, not exceeding 20 meters. As shown below:

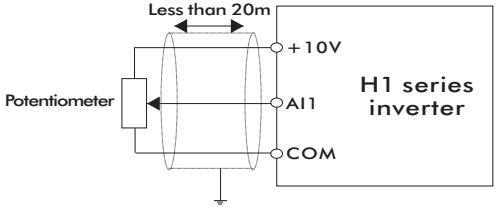

Analog input terminal wiring diagram

At some occasions where the analog signal is severely interfered, the analog signal source needs to add a filter capacitor or a ferrite core. As shown below:

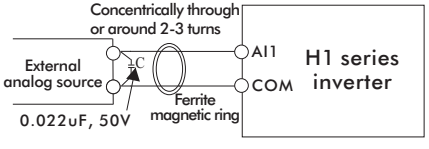

Analog input terminal acceleration filter wiring diagram

16.5 H0110 card application engraving machine instructions

16.5.1 Wiring diagram

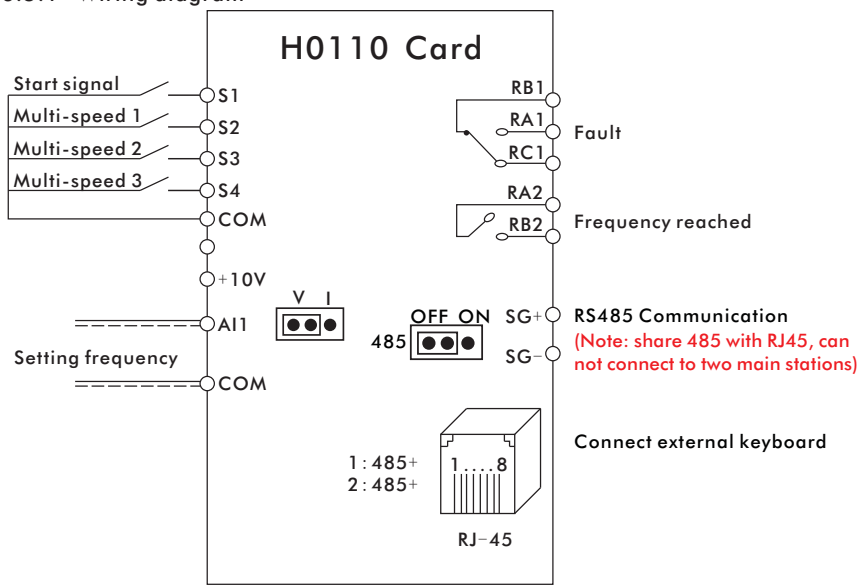

Engraving machine wiring diagram

16.5.2 Engraving machine debugging steps

A. Connect according to the wiring diagram of the engraving machine, connect to S2, S3, S4 for multi-speed speed control; connect to AI1, COM for analog speed control.
B. Power on, check the engraving machine application macro parameter P01. 20=84 (set at the factory).
C. Set the motor rated power, voltage, frequency, current, and speed according to the motor nameplate.
D. If user parameters need to be adjusted, please refer to the user parameter table for setting.
E. After the parameters are adjusted, the inverter can be started, stopped and speed adjusted through the system.
F. The multi-speed table is as follows:

S4	S3	S2	Effective multi-speed	Application macro setting frequency
0	0	1	Multi-speed 1	100Hz
0	1	0	Multi-speed 2	150Hz
0	1	1	Multi-speed 3	200Hz
1	0	0	Multi-speed 4	250Hz
1	0	1	Multi-speed 5	300Hz
1	1	0	Multi-speed 6	350Hz
1	1	1	Multi-speed 7	400Hz

0: No signal on S terminal; 1: Signal on S terminal
Note: If the inverter cannot work after the user parameter is modified, first restore the factory value P01.11=2, then set the engraving machine application macro P01.20=84.

16.5.3 Engraving machine user parameter table

Parameter number	Functions	Application macro setting value	Setting area
P01.11	Parameter operation	0	0: Normal operation; 1: Initialize the parameters except P01.XX and application macro; 2: Initialize all parameters;
P01.20	Macro program	84	0~9999 84: Engraving machine macro
P02.00	Multi-speed source	1110	0~11111111 Bit: S1; Ten: S2; Hundred: S3; Thousand: S4; . . .
P02.10	Setting value source 1	1	0: Keyboard; 1: Multi-speed; 2: AI1; 3: AI2; 5: Communication;
P02.12	Setting value source 3	2	
P02.18	Maximum setting value	400Hz	0.000~99999.000
P02.31	Multi-speed 1	25%	-1000.000~1000.000 (Relative to the maximum set value percentage)
P02.32	Multi-speed 2	37.5%	
P02.33	Multi-speed 3	50%	
P02.34	Multi-speed 4	62.5%	
P02.35	Multi-speed 5	75%	
P02.36	Multi-speed 6	87.5%	
P02.37	Multi-speed 7	100%	
P02.50	Acceleration time 0	5s	0.000~3600.000
P02.70	Deceleration time 0	5s	
P03.00	Start command source	3	0: No effect; 1: Keyboard; 2: Communications; 3: S1; 4: S2; 5: S3; 6: S4;
P03.30	Y1 Terminal Source (RA1、RB1、RC1)	4	3: Running 4: Fault 5: Warning 6: Reversing 7: Ready 1350: Zero-speed operation 1351: Frequency reached Note: After setting the engraving machine application macro , then 1350 and 1351 will work
P03.32	Y2 Terminal Source (RA2、RB2)	1351	
P06.11	Motor rated power	Set according to the motor nameplate	0.000~100000.000kW
P06.12	Motor rated voltage	Set according to the motor nameplate	0~1000V
P06.13	Motor rated frequency	Set according to the motor nameplate	1~3000Hz
P06.14	Motor rated current	Set according to the motor nameplate	0.00~1000.00A
P12.06	Motor rated speed	Set according to the motor nameplate	10~65535rpm

16.6 H0110 card application constant pressure water supply instructions

16.6.1 Wiring diagram

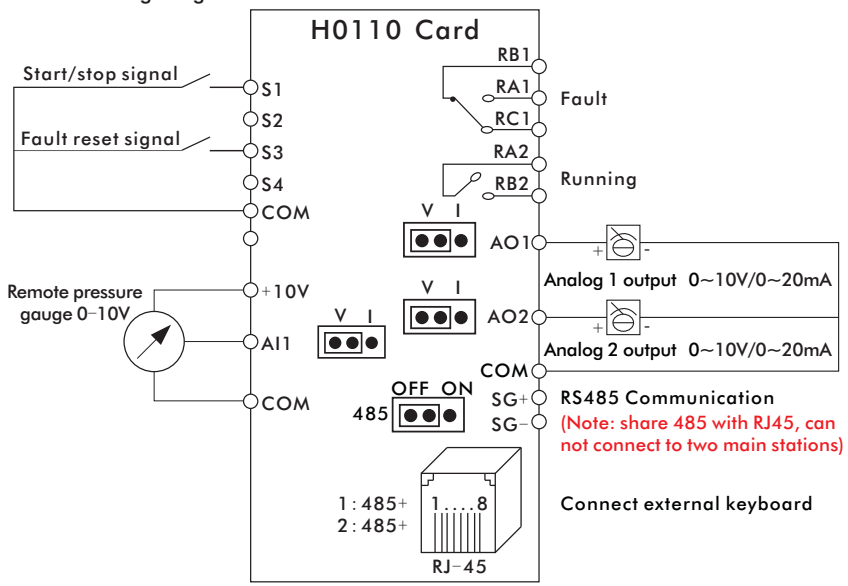

Constant pressure water supply wiring diagram

Note 1: Inverter start and stop control mode is divided into two lines (P03.20=0) and three lines (P03.20=2), wiring diagram as follows:

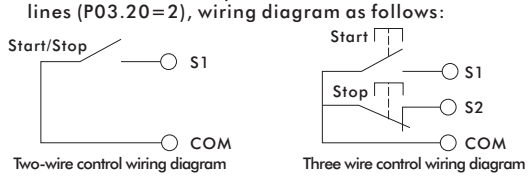

Two-wire control wiring diagram Three wire control wiring diagram

Note 2: The pressure feedback of the water pump is divided into a remote pressure gauge and a pressure sensor. The pressure sensor wiring is divided into two-wire and three-wire types. The wiring diagram is as follows

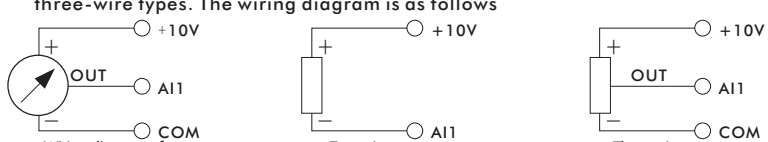

Wiring diagram of remote pressure gauge Two-wire pressure sensor wiring diagram Three wire pressure sensor wiring diagram

16.6.2 Constant pressure water supply debugging steps

A. Wiring according to constant pressure water supply wiring diagram
B. Power on, set constant pressure water supply application macro P01. 20= 86, the default pressure feedback signal is 0~10V corresponding to 0~16 kg.
C. Set motor rated power, voltage, frequency and current according to motor nameplate.
D. If user parameters need to be adjusted, please refer to the user parameter table settings.
E. After adjusting the parameters, the inverter can be started and stopped by external switch

The keyboard displays the H to show set pressure and the L to show actual pressure

Note: If the inverter cannot work normally after the user parameters are modified, first restore the factory value P01.11=2, and then set the constant pressure water supply application macro P01.20=86.

16.6.3 Constant pressure water supply user parameter table

Parameter number	Functions	Application macro setting value	Setting area
P01.11	Parameter operation	0	0: Normal operation; 1: Initialize the parameters except P01.XX and application macro; 2: Initialize all parameters;
P01.20	Macro program	86	0~9999 86: Constant pressure water supply macro
P02.03	Source of incremental command(UP)	1	Bit: keyboard; Ten: communication; Hundred: S1; Thousand: S2; ...
P02.04	Source of decremental command(DOWN)	1	
P02.11	Feedback values	2	0: keyboard; 1: Multi-speed; 2: AI1;
P02.13	Setting relationship selection	8	8: PID
P02.18	Maximum set value	50Hz	0.000~99999.000
P02.28	Lift rate	0%	-1000.000~1000.000
P02.92	Set value	5kg	-1000.000~1000.000
P03.00	Start command source	3	0: No effect; 1: keyboard; 2: Communication; 3: S1; 4: S2; 5: S3; 6: S4;
P03.04	Stop command source	0	
P03.07	Reset command source	5	
P03.20	S1 type	0	0: Positive logic; 1: Reverse logic; 2: Rising edge; 3: Falling edge
P03.21	S2 type	1	
P03.30	Y1 terminal source (RA1, RB1, RC1)	4	0: Always 0; 1: Always 1; 2: Stopped; 3: Running; 4: Fault; 5: Warning; 6: Reversing; 7: Ready
P03.32	Y2 terminal source (RA2, RB2)	3	
P03.41	Ai1 low-end voltage (current)	0V(mA)	-999999.000~999999.000
P04.00	PID proportional gain	0.010%	0.000~10.000
P04.01	PID integration time	10.000s	0.001~9999.000
P04.02	PID differential gain	0.000%	0.000~9999.000
P04.05	PID output upper limit	100.000%	-1000.000~1000.000
P04.06	PID output lower limit	0.000%	(100% relative maximum set value)
P04.09	PID range	16kg	0.001~99999.000
P04.11	PID sleep frequency	40%	0.000~500.000 (100% relative maximum set value)
P04.12	PID enter sleep time	10s	0.000~3600.000
P04.13	PID wake-up deviation	20%	0.000~100.000 (Relative setting pressure is 100 %)
P04.14	PID enter wake-up time	2s	0.000~3600.000
P04.15	PID sleep action	4	0: No sleep; 1: PID Stop; 2: Decelerate to stop; 3: Free parking; 4: Pause; 5: Minimum frequency operation
P05.00	Control mode	0	0: VF; 1: Open loop vector1
P06.11	Motor rated power	Set according to the motor nameplate	0.000~100000.000
P06.12	Motor rated voltage	Set according to the motor nameplate	0~1000
P06.13	Motor rated frequency	Set according to the motor nameplate	1~3000
P06.14	Motor rated current	Set according to the motor nameplate	0.00~1000.00
P12.00	Dry pump detection frequency	25Hz	0.000~999999.000
P12.01	Dry pump detection current	0A	0.000~999999.000 0: Dry pump test closed
P12.02	Breakline detection voltage	0V	0.000~999999.000 0: Disconnection detection off

CHAPTER 17 - Standard card (H0100) Instructions

17.1 Overview

H0100 card is a multifunctional I/O card used in H1 series. It can realize two digital input, one relay output and one analog input, and also has RS-485 communication interface, can be connected to the external keyboard.

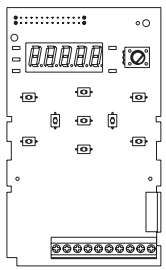

H0100 card distribution diagram

17.2 Mechanical installation

Please install when the inverter is completely powered off; align the pins(26 pins) on the H0100 card and the inverter power board plug tightly.

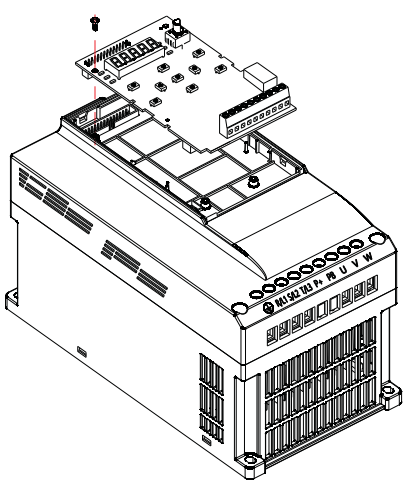

H0100 card mechanical installation drawing

17.3 Wiring diagram

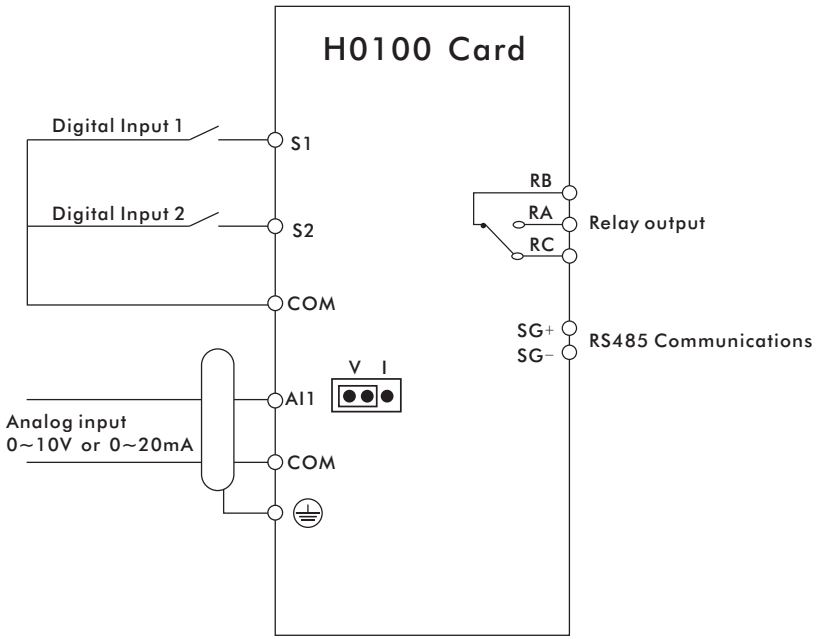

17.4 Control terminal

17.4.1 Terminal specifications

Terminal symbol	Terminal name	Function Description
+10V	Reserved terminals	No power output
AI1	Analog input terminal	1. Iput voltage range: DC 0V ~ 10V 2. Input current range: 0 ~ 20mA 3. Select voltage or current through AI1 jumper
COM	Digital, analog	Internal isolation from communication ground GND
S1~S2	Digital input terminal	1. Optocoupler isolation 2. Input impedance: 2.4kΩ 3. Voltage range during level input, 9V ~ 30V
RA, RB, RC	Relay output (one path is always open , one path is always closed)	Contact capacity: 250VAC 3A/30VDC 3A
SG+,SG−	485 Communication terminals	Connect to the upper computer

17.4.2 Terminal wiring

A. Digital input terminal:

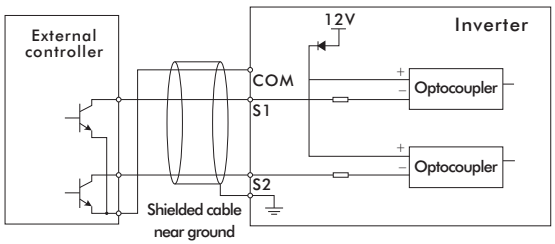

Digital input terminal wiring

Note: The wiring mode of the digital input terminal of the H0100 card is NPN type.
If users need other wiring methods, please consult our technicians.

B. Analog input terminal:

Because the analog voltage signal is particularly susceptible to external interference, it is generally necessary to use a shielded cable, and the wiring distance should be as short as possible, not more than 20 meters. As shown below:
In some situations where analog signals are severely disturbed, a filter capacitor or ferrite core must be added to the analog signal source side.
As shown below:

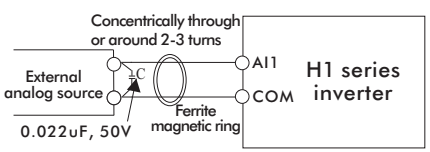

Analog input terminal plus filter processing wiring diagram

CHAPTER 18 - H0200 Card instructions for use

18.1 Overview

H0200 card is a multifunctional I/O card for H1 series inverters. It can realize 10 digital inputs, 3 relay outputs, 2 analog inputs, 2 analog outputs, STO input, and also has RS-485 communication interface, can be connected to the upper computer.

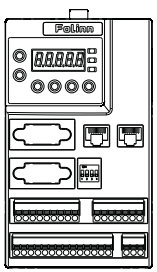

H0200 card distribution diagram

18.2 Mechanical installation

Please install when the inverter is completely powered off; align the pins(26 pins) on the H0200 card and the inverter power board plug tightly.

⚠ Warning: It is strictly forbidden to plug or unplug the H0200 card with power on!

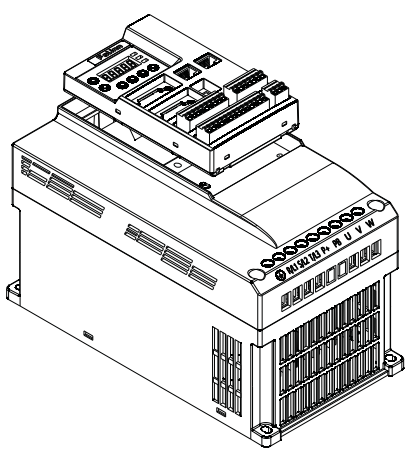

H0200 card mechanical installation drawing

18.3 Wiring diagram

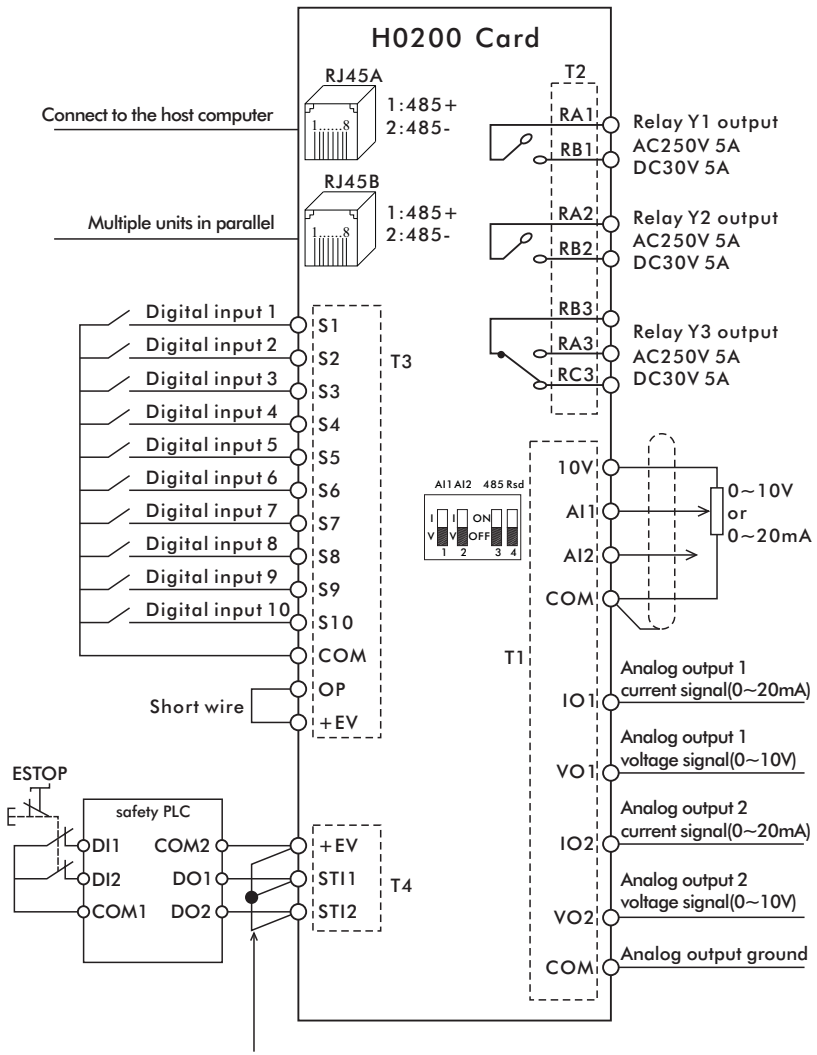

This is the factory short wiring between +EV,STI1 and STI2,
To use safety function wiring, please remove this short wire.

18.4 Control terminal

18.4.1 Terminal specifications

Input and output signal description				
Port	Type	Pin	Name	Function
RJ45A	Communication	1	485+	485 communication (MODBUS RTU), two network ports share one 485 interface, and cannot be connected to two master stations at the same time
RJ45B		2	485-	
T1	Analog input	1	10V	10V power terminal
		2	AI1	Analog input 1 (0~10V or 0~20mA)
		3	AI2	Analog input 2 (0~10V or 0~20mA)
		4	COM	COM
	Analog output	5	IO1	Analog output 1 current signal (0~20mA)
		6	VO1	Analog output 1 voltage signal (0~10V)
		7	IO2	Analog output 2 current signal (0~20mA)
		8	VO2	Analog output 2 voltage signal (0~10V)
		9	COM	COM
T2	Relay output	1	RA1	Relay Y1 output (1 normally open)
		2	RB1	
		3	RA2	Relay Y2 output (1 normally open)
		4	RB2	
		5	RA3	Relay Y3 output (1 normally open, 1 normally closed)
		6	RB3	
		7	RC3	
T3	Digital input	1	COM	COM
		2	S1	Digital input 1
		3	S2	Digital input 2
		4	S3	Digital input 3
		5	S4	Digital input 4
		6	S5	Digital input 5
		7	S6	Digital input 6
		8	S7	Digital input 7
		9	S8	Digital input 8
		10	S9	Digital input 9
		11	S10	Digital input 10
	Control power	12	COM	COM
		13	OP	External power input terminal (short-circuit between OP and +EV)
		14	+EV	12V power terminal
T4	STO	1	+EV	12V power terminal (from factory + EV,STI1 and STI2 are shorted)
		2	STI1	STO input 1
		3	STI2	STO input 2

18.4.2 Terminal wiring

A. Digital input terminal wiring:

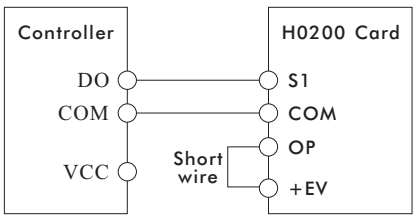

NPN type (use internal power supply)

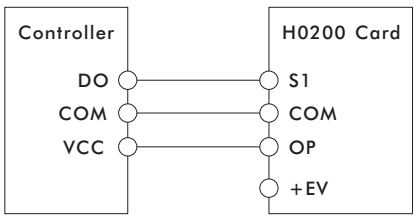

NPN type (using external power supply)

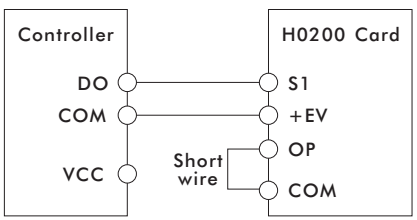

PNP type (using internal power supply)

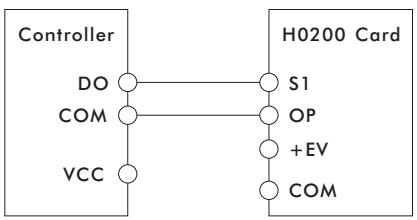

PNP type (using external power supply)

18.5 Operator description

18.5.1 Keyboard appearance and key description

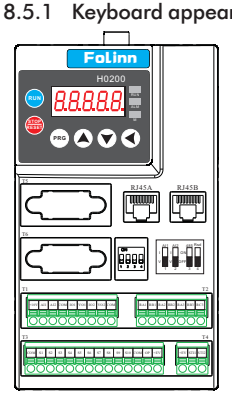

Figure H0200 Keyboard

No.	Structure	Function Description
1		Display
2	PRG	Programming/Exit key
3		In the state display interface, it is the state switch key; in other interfaces, it is the left shift key, Long press 2S to confirm
4	RUN	Run key
5		In programming mode: the value change key, In non-programming mode: the UP/DOWN selection key, See parameters P01.63, P02.03, P02.04
6		
7	STOP RESET	Stop/reset key

18.5.2 Indicator function description

Indicator	Status	Function Description
RUN	Bright/ flashing	Running/decelerating
ALM	Bright	Fault indication
M	Bright	Customer customized instructions

18.5.3 Display description

Monitoring item	Display item description	Monitoring item	Display item description
F	Output frequency	H	Display value 1 (selected by P01.68)
C	Output current	t	Display value 2 (selected by P01.69)
U	The output voltage	A	Current alarm
d	DC bus voltage	E	Current fault

18.6 Inverter safety switch STO function

18.6.1 Function description

H1 series H0200 function card provides safe torque off (STO, Safe Torque Off) function, through STI1 and STI2 signal input to turn off IGBT, and then prevent the generation of motor torque, in order to achieve the purpose of safe stop.

18.6.2 Safety input terminal function detailed description

Terminal name	Function Description
+EV	When the STO function is not used, STI1 and STI2 can be short wired by +EV
STI1	STO function channel 1 signal input
STI2	STO function channel 2 signal input

Table 1 Terminal function description

The operation logic and keyboard display description after STI1/STI2 signal input is as follows:

Signal	Status			
STI1 and +EV	ON	OFF	ON	OFF
STI2 and +EV	ON	ON	OFF	OFF
Inverter output	Ready to output	STI1 mode Torque output stop	STI2 mode Torque output stop	STO mode Torque output stop
Keyboard abnormal display	No abnormal display	E0034	E0035	E0033(P09.49=2)

Table 2 Action logic and keyboard display description

E0033 indicates that STI1 and STI2 operate at the same time.
E0034 indicates STI1 operation.
E0035 indicates STI2 operation.
E0036 indicates that the internal STO circuit of STI1 is diagnosed as abnormal.

18.6.3 Wiring diagram

A. The internal circuit diagram of the safety control loop is shown in Figure 1 below.
B. When from factory, the terminals +EV, STI1, and STI2 in the safety control circuit are shorted together with short wires, as shown in the red box.
C. The wiring of the safety control circuit using the inverter is as follows.

(1) Remove the +EV, STI1, and STI2 short wires.
(2) The wiring is shown in Figure 2 below. When normal, the ESTOP contact of the switch must be closed so that the inverter can output and not jump abnormally.
(3) In STO mode, the switch ESTOP opens. The inverter stops output and the panel displays E0033.

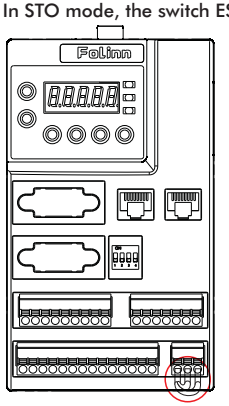

Figure 1

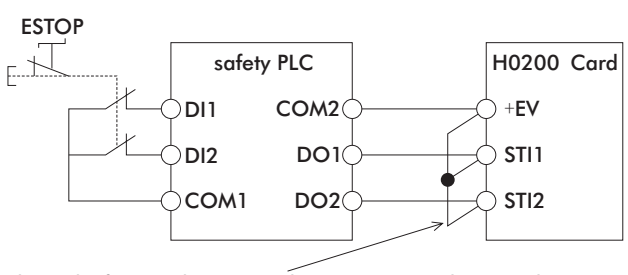

This is the factory short wiring between +EV and STI1 and STI2.
To use the safety function wiring, please remove this short wiring.
On the contrary, if the safety function is turned off, + EV must be shorted together with STI1 and STI2.

Figure 2

CHAPTER 19 - H0201 Card instructions for use

19.1 Overview

H0201 card is a multifunctional I/O card for H1 series inverters. It can realize 10 digital inputs, 3 relay outputs, 2 analog inputs, 2 analog outputs, and also has RS-485 communication interface, can be connected to the upper computer.

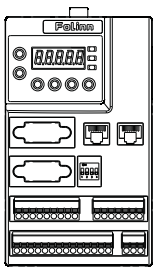

H0201 card distribution diagram

19.2 Mechanical installation

Please install when the inverter is completely powered off; align the pins(26 pins) on the H0201 card and the inverter power board plug tightly.

⚠ Warning: Do not to plug or unplug the H0201 card when powered!

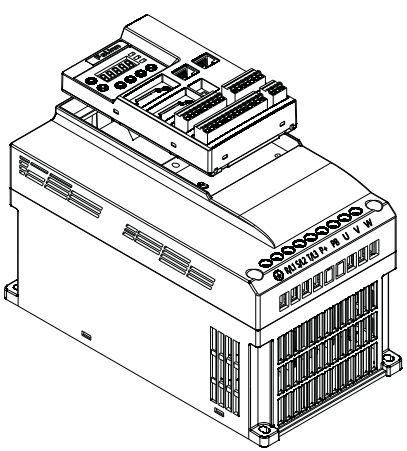

H0201 card mechanical installation drawing

www.oyostepper.com

19.3 Wiring diagram

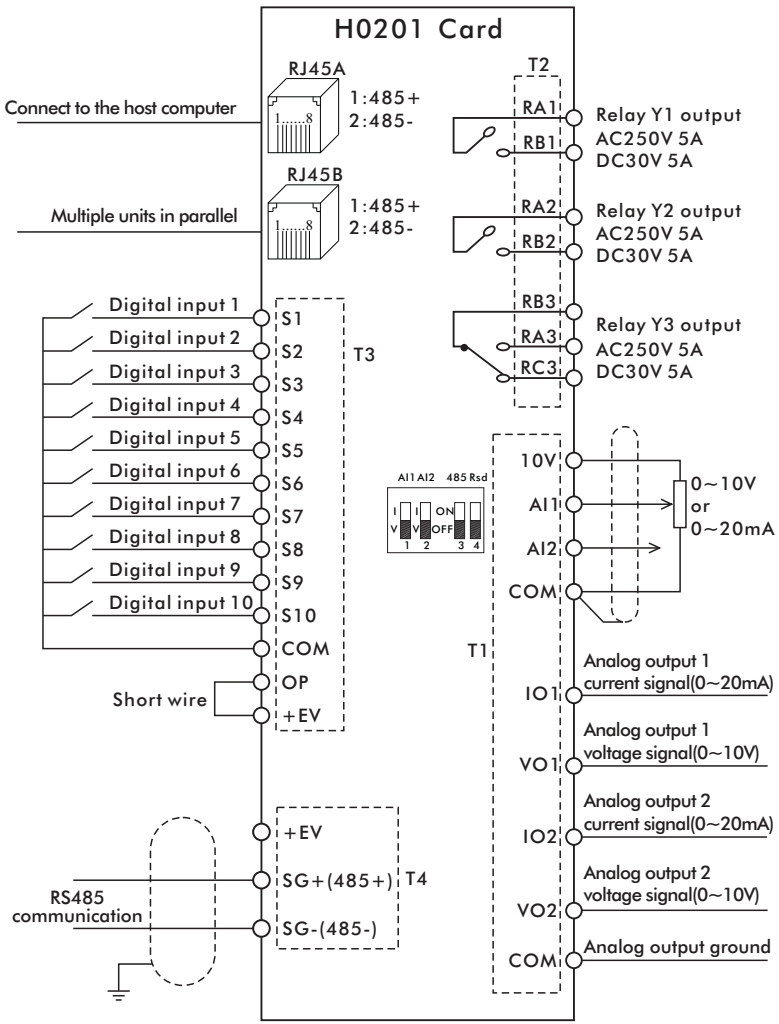

www.oyostepper.com

19.4 Control terminal

19.4.1 Terminal specifications

Input and output signal description				
Port	Type	Pin	Name	Function
RJ45A	Communication	1	485+	485 communication (MODBUS RTU), two network ports share one 485 interface, and cannot be connected to two master stations at the same time
RJ45B		2	485-	
T1	Analog input	1	10V	10V power terminal
		2	AI1	Analog input 1 (0~10V or 0~20mA)
		3	AI2	Analog input 2 (0~10V or 0~20mA)
		4	COM	COM
	Analog output	5	IO1	Analog output 1 current signal (0~20mA)
		6	VO1	Analog output 1 voltage signal (0~10V)
		7	IO2	Analog output 2 current signal (0~20mA)
		8	VO2	Analog output 2 voltage signal (0~10V)
		9	COM	COM
T2	Relay output	1	RA1	Relay Y1 output (1 normally open)
		2	RB1	
		3	RA2	Relay Y2 output (1 normally open)
		4	RB2	
		5	RA3	Relay Y3 output (1 normally open, 1 normally closed)
		6	RB3	
		7	RC3	
T3	Digital input	1	COM	COM
		2	S1	Digital input 1
		3	S2	Digital input 2
		4	S3	Digital input 3
		5	S4	Digital input 4
		6	S5	Digital input 5
		7	S6	Digital input 6
		8	S7	Digital input 7
		9	S8	Digital input 8
		10	S9	Digital input 9
		11	S10	Digital input 10
	Control power	12	COM	COM
		13	OP	External power input terminal (short-circuit between OP and +EV)
		14	+EV	12V power terminal
T4	Communication	1	+EV	12V power terminal
		2	SG+	It shares a 485 interface with RJ45A and RJ45B, and cannot connect to two master stations for communication at the same time
		3	SG-	

19.4.2 Terminal wiring

A. Digital input terminal wiring:

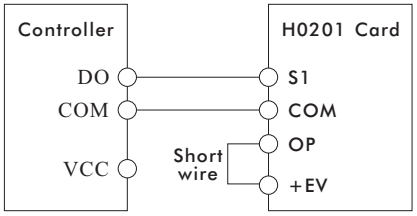

NPN type (use internal power supply)

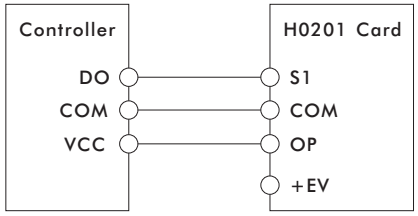

NPN type (using external power supply)

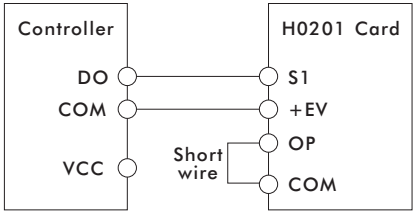

PNP type (using internal power supply)

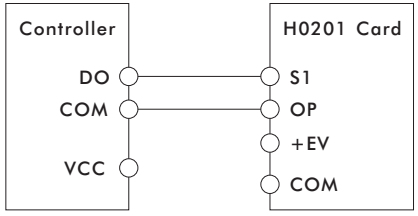

PNP type (using external power supply)

19.5 Operator description

19.5.1 Keyboard appearance and key description

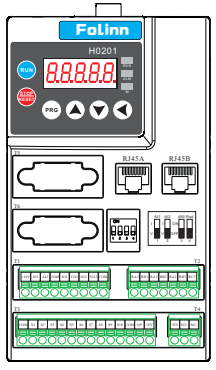

Figure H0201 Keyboard

No.	Structure	Function Description
1	8.8.8.8.8.	Display
2	PRG	Programming/Exit key
3	◀	In the state display interface, it is the state switch key; in other interfaces, it is the left shift key, Long press 2S to confirm
4	RUN	Run key
5	▲	In programming mode: the value change key, In non-programming mode: the UP/DOWN selection key, See parameters P01.63, P02.03, P02.04
6	▼	
7	STOP RESET	Stop/reset key

19.5.2 Indicator function description

Indicator	Status	Function Description
RUN	Bright/ flashing	Running/decelerating
ALM	Bright	Fault indication
M	Bright	Customer customized instructions

19.5.3 Display description

Monitoring item	Display item description	Monitoring item	Display item description
F	Output frequency	H	Display value 1 (selected by P01.68)
C	Output current	t	Display value 2 (selected by P01.69)
U	The output voltage	A	Current alarm
d	DC bus voltage	E	Current fault

CHAPTER 20 - OP-H101 external keyboard simple instructions

20.1 Overview

OP-H101 is an optional external keyboard for H1 series inverters, and the RS485 communication with the local keyboard is connected through a straight-through twisted pair network cable.

20.2 Keyboard features

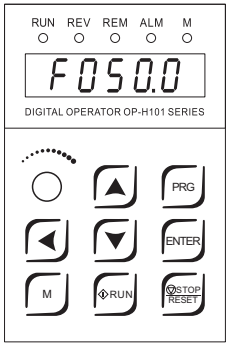

No.	Structure	Function Description
1	F050.0	Display
2		Potentiometer
3		State switch key left shift key
4		Increment key
5		Decrement key
6	PRG	Programming/Exit key
7	ENTER	Enter
8	RUN	Run key
9	STOP RESET	Stop/reset key
10	M	Customized keys

Indicator	Status	Function Description
RUN	Bright/ flashing	Running/decelerating
REV	Bright	Reversing
REM	Bright	Remote start
ALM	Bright	Error indication
M	Bright	Customized instructions, default alarm instructions

20.3 Parameter setting and description

P01.41	Local address	1(Factory default)	Slave address	The communication parameter setting value of the inverter must be equal to the factory value, otherwise the inverter and the external keyboard cannot communicate, and the external keyboard will always display the version number u****.
P01.42	Baud rate	3(Factory default)	19200bps	
P01.43	Parity check	0(Factory default)	No check	
P01.45	Stop bit	1(Factory default)	1 bit	
P01.63	Keyboard setting source	1	Potentiometer speed	1. When the keyboard setting source P01.63 setting value is changed, it needs to be re-powered to be effective. 2. After operating the M key to make the inverter stop freely, it needs to be re-powered to start. 3. Customized M key command priority: Free stop command> JOG command > Reverse command.
		0	Increase and decrease keys for speed control	
P02.10	Set value source 1	5	Speed control enable	
P02.03	Increase (UP) select source	10	Increment key to increase frequency	
P02.04	Decrease (DOWN) select source	10	Decrease key to decrease frequency	
P03.00	Start command source	2	Start-stop enable	
P03.07	Reset command source	2	Reset enable	
P03.02	Reverse command	2	M key reverse	
P03.03	JOG command	2	M key jog	
P03.05	Free parking command	2	M key free stop	

Note: In addition to the communication parameters (P01. 41~P01. 45) that need to be determined for the above parameters, other parameters are modified according to the function of the external keyboard keys.
The corresponding parameters of the keys that do not need to be operated do not need to be changed!

20.4 Installation method and related dimensions

The OP-H101 external keyboard supports embedded installation, no external panel frame is required.
The following figure shows the outline and opening dimensions of the OP-H101 external keyboard.

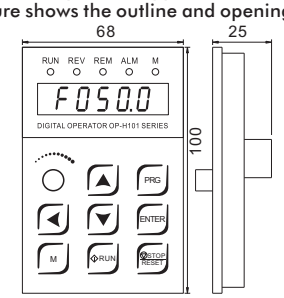

Dimensions (Unit: mm)
68 (W) x 100 (H) x 25 (D)

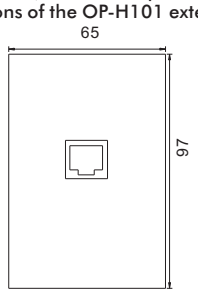

Hole size drawing (unit: mm)
65 (W) x 97 (H)

Contact Us:
E-mail Address:
Oyostepper.com@gmail.com
Telephone Number: +86-023-68438829
Our website:https://www.oyostepper.com/

CHAPTER 21 - OP-H102 external keyboard simple instructions

21.1 Overview

OP-H102 is an optional external keyboard for H1 series inverters, and the RS485 communication with the local keyboard is connected through a straight-through twisted pair network cable.

21.2 Keyboard features

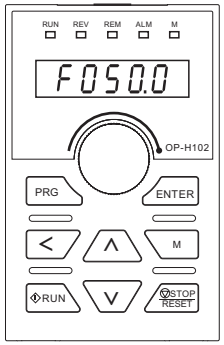

No.	Structure	Function Description
1	F050.0	Display
2		Potentiometer
3		State switch key left shift key
4		Increment key
5		Decrement key
6	PRG	Programming/Exit key
7	ENTER	Enter
8	RUN	Run key
9	STOP RESET	Stop/reset key
10	M	Customized keys

Indicator	Status	Function Description
RUN	Bright/ flashing	Running/decelerating
REV	Bright	Reversing
REM	Bright	Remote start
ALM	Bright	Error indication
M	Bright	Customized instructions, default alarm instructions

21.3 Parameter setting and description

P01.41	Local address	1(Factory default)	Slave address	The communication parameter setting value of the inverter must be equal to the factory value, otherwise the inverter and the external keyboard cannot communicate, and the external keyboard will always display the version number u****.
P01.42	Baud rate	3(Factory default)	19200bps	
P01.43	Parity check	0(Factory default)	No check	
P01.45	Stop bit	1(Factory default)	1 bit	
P01.63	Keyboard setting source	1	Potentiometer speed	1. When the keyboard setting source P01.63 setting value is changed, it needs to be re-powered to be effective. 2. After operating the M key to make the inverter stop freely, it needs to be re-powered to start. 3. Customized M key command priority: Free stop command> JOG command > Reverse command.
		0	Increase and decrease keys for speed control	
P02.10	Set value source 1	5	Speed control enable	
P02.03	Increase (UP) select source	10	Increment key to increase frequency	
P02.04	Decrease (DOWN) select source	10	Decrease key to decrease frequency	
P03.00	Start command source	2	Start-stop enable	
P03.07	Reset command source	2	Reset enable	
P03.02	Reverse command	2	M key reverse	
P03.03	JOG command	2	M key jog	
P03.05	Free parking command	2	M key free stop	

Note: In addition to the communication parameters (P01. 41~P01. 45) that need to be determined for the above parameters, other parameters are modified according to the function of the external keyboard keys.
The corresponding parameters of the keys that do not need to be operated do not need to be changed!

21.4 Installation method and related dimensions

OP-H102 external keyboard installation requires the purchase panel frame to cooperate with the installation. The following figure shows the outline and opening dimensions of the panel frame.

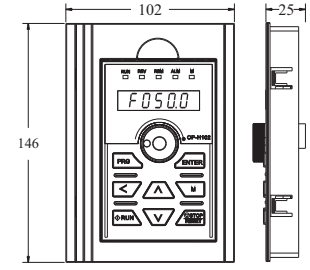

Dimensions of the panel frame (unit: mm)
102(W) x 146(H) x 25(D)

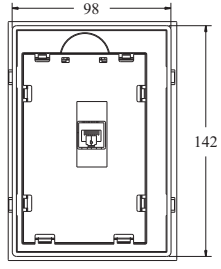

Panel frame hole size drawing (unit: mm)
98(W) x 142(H)